SOLICITATION/CONTRACT/ORDER FOR COMMERCIAL ITEMS

OFFEROR TO COMPLETE BLOCKS 12,17,23,24 & 30

1. REQUSITION NUMBER: 5000013832

PAGE 1 OF 5

2. CONTRACT NO.

3.AWARD/EFFECTIVE DATE

4. ORDER NUMBER

5. SOLICITATION NUMBER: LX-0093-04

6. SOLICITATION ISSUE DATE: 09/02/2004

7. FOR SOLICITATION INFORMATION CALL:

a. NAME: Teresa J. Begley

b. TELEPHONE NUMBER *(No collect calls)*: 859-253-9215

8. OFFER DUE DT/LOCAL TIME: 10/01/2004 2:00PM

9. ISSUED BY CODE

Lexington Cable
UNICOR, FPI
Lexington, KY 40511

10. THIS AQUISITION IS

- [ ] UNRESTRICTED
- [X] SET ASIDE 100 % FOR
  - [X] SMALL BUSINESS
  - [ ] SMALL DISADV.BUSINESS
  - [ ] 8(A)

SIC: 3359

SIZE STANDARD: 500 Emp.

11. DELIVERY FOR FOB DESTINATION UNLESS BLOCK IS MARKED

- [ ] SEE SCHEDULE

12. DISCOUNT TERMS

- [X] 13a. THIS CONTRACT IS A RATED ORDER UNDER DPAS (15 CFR 700)

13b. RATING: DOA2

14. METHOD OF SOLICITATION

- [ ] RFQ
- [ ] IFB
- [X] RFP

15. DELIVER TO CODE

UNICOR, FPI
3301 Leestown Road
LEXINGTON, KY 40511
USA

16. ADMINISTERED BY CODE

Lexington Cable
UNICOR, FPI
Lexington, KY 40511

17a. CONTRACTOR/OFFEROR CODE 999999999 FACILITY CODE

-
-
-, DC

TELEPHONE NO. TIN:

RFQ: 6200003394

- [ ] 17b. CHECK IF REMITANCE IS DIFFERENT AND PUT SUCH ADDRESS IN OFFER

18a. PAYMENT WILL BE MADE BY CODE

UNICOR, FPI
3301 Leestown Road Attn: Business Mgr
LEXINGTON, KY 40511
USA

18b. SUBMIT INVOICES TO ADDRESS SHOWN IN BLOCK 18a UNLESS BLOCK BELOW IS CHECKED [ ] SEE ADDENDUM

19. ITEM NO.	20. SCHEDULE OF SUPPLIES/SERVICES	21. QUANTITY	22. UNIT	23. UNIT PRICE	24. AMOUNT
	See Section B				

25. ACCOUNTING AND APPROPRIATION DATA

26. TOTAL AWARD AMOUNT *(For Govt. Use Only)*

- [X] 27a. SOLICITATION INCORPORATES BY REFERENCE FAR 52.212-1, 52.212-4. FAR 52.212-3 AND 52.212-5 ARE ATTACHED. ADDENDA [X] ARE [ ] ARE NOT ATTACHED
- [ ] 27b. CONTRACT/PURCHASE ORDER INCORPORATES BY REFERENCE FAR 52.212-4. FAR 52.212-5 IS ATTACHED. ADDENDA [ ] ARE [ ] ARE NOT ATTACHED

28. CONTRACTOR IS REQUIRED TO SIGN THIS DOCUMENT AND RETURN 1 COPIES TO ISSUING OFFICE. CONTRACTOR AGREES TO FURNISH AND DELIVER ALL ITEMS SET FORTH OR OTHERWISE IDENTIFIED ABOVE AND ON ANY ADDITIONAL SHEETS SUBJECT TO THE TERMS AND CONDITIONS SPECIFIED HEREIN. [X]

29. AWARD OF CONTRACT: REFERENCE _____ OFFER DATED _____. YOUR OFFER ON SOLICITATION (BLOCK 5), INCLUDING ANY ADDITIONS OR CHANGES WHICH ARE SET FORTH HERIN, ACCEPTED AS TO ITEMS: [X]

30a. SIGNATURE OF OFFEROR/CONTRACTOR

31a. UNITED STATES OF AMERICA *(SIGNATURE OF CONTRACTING OFFICER)*

30b. NAME AND TITLE OF SIGNER *(TYPE OR PRINT)*

30c. DATE SIGNED

31b. NAME OF CONTRACTING OFFICER *(TYPE OR PRINT)*

Teresa J. Begley 859-253-9215

31c. DATE SIGNED: 09/10/2004

32a. QUANTITY IN COLUMN 21 HAS BEEN

- [ ] RECEIVED
- [ ] INSPECTED
- [ ] ACCEPTED, AND CONFORMS TO THE CONTRACT EXCEPT AS NOTED

33. SHIP NUMBER

- [ ] PARTIAL
- [ ] FINAL

34. VOUCHER NUMBER

35. AMOUNT VERIFIED CORRECT FOR

36. PAYMENT

- [ ] COMPLETE
- [ ] PARTIAL
- [ ] FINAL

37. CHECK NUMBER

32b. SIGNATURE OF AUTHORIZED GOVT. REPRESENTATIVE

32c. DATE

38. S/R ACCOUNT NUMBER

39. S/R VOUCHER NUMBER

40. PAID BY

41a. I CERTIFY THIS ACCOUNT IS CORRECT AND PROPER FOR PAYMENT

42a. RECEIVED BY *(Print)*

41b. SIGNATURE AND TITLE OF CERTIFYING OFFICER

41c. DATE

42b. RECEIVED AT *(Location)*

42c. DATE REC'D *(YY/MM/DD)*

42d. TOTAL CONTAINERS

Terms of delivery: DST

TERMS OF DELIVERY IS F.O.B. DESTINATION TO LEXINGTON, KY.

Solicitation issued as a Request for Proposal for a multiple award for 5-year Requirements Contracts.

Estimated maximum quantity for the life of the contract is 70,000 each for PCC0135 (line item 0001) and 70,000 each for PCC0155 (line item 0002) to be divided equally between the multiple awards.

Delivery will be 90 days (or Earlier) on line item 0001 and line item 0002.

Delivery orders will be issued in accordance with FAR 52.216-19.

Representations and Certifications, ACH Forms and three (3) references must be submitted with offer.

Please fill out DUNS Number:_____.

Contract Administrator will be Teresa J. Begley, Contract Specialist at UNICOR, Lexington, KY.

NO INCREMENTAL PRICING WILL BE ACCEPTED.

*

SECTION B
SUPPLIES OR SERVICES AND PRICES/COSTS

Item No.	SUPPLIES OR SERVICES	Quantity	U/M	UNIT PRICE	AMOUNT IN US$	PR Number	Del.Date
00001	PCC0135	70,000	EA			5000013832	
D,A3019069-1							
VERIFIED-PER-DRAWING							
UNICOR PART NO: PCC0135							
DESCRIPTION: PRINTED CIRCUIT CARD							
PART NO: DWG#A3019069-1							
PROCUREMENT SPEC: DWG#A3019069-1 REV.D							
	*						
00002	PCC0155	70,000	EA			5000013832	
D,A3142344,PRINTED-WIRING-BOARD,LS-671							
VERIFIED-PER-DRAWING							
UNICOR PART NO: PCC0155							
DESCRIPTION: PRINTER-CIRCUIT-CARD							
PART NUMBER: DWG#A3142344							
PROCUREMENT SPEC: DWG#A3142344 REV.D							
	*						

PLEASE READ THIS SOLICITATION IN ITS ENTIRETY

This is a combined synopsis/solicitation for commercial items prepared in accordance with the format in Subpart 12.6 as supplemented with additional information included in this notice. This announcement constitutes the only solicitation; offers are being requested and a written solicitation will not be issued. The solicitation number is LX0093-04 and this solicitation is issued as a Request For Proposals (RFP). The solicitation document and incorporated provisions and clauses are those in effect through Federal Acquisition Circular 2001-24. The North American Industry Classification System code is 334418 (PCC0135 and PCC0155). This requirement is 100% set-aside for Small Business with a Small Business size standard of 500 employees. UNICOR, Federal Prison Industries, Inc., intends to enter into multiple awards for a five-year, firm-fixed-price, requirements contract for the following commercial items:

ITEM 0001: PRINTED CIRCUIT CARD, PCC0135, D, 3019069-1, SOURCE CONTROLLED DRAWING, CURRENT REVISION, ESTIMATED MAXIMUM QUANTITY IS 70,000 EACH.

ITEM 0002: PRINTED CIRCUIT CARD, PCC0155, IPC-A-600, CL2, LS-671, EAW-ELECTRIC-P/N, CURRENT REVISION, ESTIMATED MAXIMUM QUANTITY IS 70,000 EACH.

UNICOR, Federal Prison Industries, Inc. intends to enter into a multiple award on this solicitation due to the increase in production and demand from our customer. The award will be split equally and delivery orders will be rotated between awards.

All FAR forms, clauses and provisions necessary to submit an offer may be accessed at the following web site: http://www.arnet.gov/far. This combined synopsis/solicitation and necessary forms are available on www.eps.gov or UNICOR's web site: www.unicor.gov/procurement/proelectron.htm. Go to #navigate to# box and scroll down and click on procurement forms.

Shipments against delivery orders MUST be complete. (No shortages)

Required delivery shall be 90 days or sooner after receipt of each delivery order issued for this line item. This is a DOA7 rated order.

Drawings can be downloaded with the solicitation. OR
Drawings may be requested from the contracting officer in writing to tbegley@central.unicor.gov or by fax to 859-253-0022. REQUESTS RECEIVED AFTER 4:00 P.M. EST/EDT 9/24/04 WILL NOT BE FILLED.

The following FAR clauses and provisions apply to this acquisition:

52.204-6 Contractor Identification Number Data Universal Numbering System (DUNS);

52.211-14 Notice of Priority Rating for National Defense Use;

52.211-15 Defense Priority and Allocation Requirements;

52.211-16, Variation in Quantity of +0% percent increase or -0% percent decrease;

52.212-1, Instructions to Offerors - Commercial;

52.212-2, Evaluation - Commercial Items, significant evaluation factors are past performance and price. Past performance is significantly more important than price. Quality, delivery and customer service will be evaluated under past performance;

52.212-3, Offeror Representations and Certifications - Commercial Items - this document must be completed and provided with offer;

52.212-4, Contract Terms and Conditions - Commercial Items; NOTE: This contract is not subject to the Contract Disputes Act of 1978, as amended (41 U.S.C. 601-613), as stated in Clause 52.212-4. Disputes arising under or relating to this contract shall be resolved in accordance with FAR 52.233-1 Disputes (JUL 2002) (DEVIATION), which is incorporated herein by reference. The Contractor shall proceed diligently with performance of this contract, pending final resolution of any dispute arising under the contract. To view the full text clause FAR 52.233-1 Disputes (JUL 2002) (DEVIATION), go to www.unicor.gov, select Business Opportunities, select Deviation;

52.212-5, Contract Terms and Conditions Required to Implement Statues or Executive Orders - Commercial Items, which includes 52.203-6, Restrictions on Subcontractor Sales to the Government, with Alternate I and 52.232-33, Payment of Electronic Funds Transfer - Central Contractor Registration; 52.225-1 Buy American Act-Balance of Payments program-Supplies, 52.225-2 Buy American Act-Balance of Payments Program Certificate;

52.216-18, Ordering, orders may be issued under the resulting contract from the date of award through five (5) years thereafter;

52.216-19, Order Limitation FAR 52.216-19 (a) minimum delivery order of 200 each for PCC0135 (line item 0001) and PCC0155 (line item 0002); (b)(1) max delivery order of 3500 each for PCC0135 (line item 0001) and PCC0155 (line item 0002); (b)(2) any order for a combination of items in excess of 7000 each, contractor will not be obligated to honor. Contractor will not be obligated to honor a series of orders from the same ordering office, within a 15 day period that together call for quantities exceeding the maximum order limitations. However, the contractor shall honor orders exceeding the maximum order limitations unless the order(s) are returned to the ordering office within seven calendar days after issuance with a written statement expressing the contractors intent not to ship;

52.216-21, Requirements - applies until 90 days after contract validity end date;

52.219-6 Notice of Total Small Business Set-Aside

52.232-18, Availability of Funds;

52.233-1, Disputes (Deviation)

52.246-1, Contractor Inspection Requirement;

With the original invoice, the vendor will furnish the original Certificate of Conformance that will be signed by the person who has certification authority with their title and position included. A copy of this Certificate of Conformance and the packing slip will accompany each shipment. The furnishing of the Certificate of Conformance will be a condition of acceptance at destination and payment will not be made until it is received. Inspection and acceptance will be by FPI.

52.247-34 Destination, delivery shall be FOB destination to UNICOR, FPI Lexington, 3301 Leestown Road, Lexington, KY 40511. The COTR is James Jones (859) 254-8749.

PLEASE PROVIDE THE REQUIRED INFORMATION BELOW OR YOU WILL NOT BE CONSIDERED FOR AWARD!

PROPOSAL SUBMISSION REQUIREMENTS: Each proposal package shall consist of the following completed and signed documents: SF1449, all amendments issued, most current representations and certifications for commercial items, three (3) Business Management Questionnaires with recent and relevant contracts for the same or similar items iaw FAR 52.212(b)(10), a completed copy of FPI 1000K2 Subcontract Certification (large businesses only), and an ACH form.

Implementation of the Central Contractor Registration (CCR) was mandated and effective October 1, 2003. ALL contractors MUST register in the CCR prior to award and remain registered through final payment of the contract. For additional information and to register, go to www.ccr.gov. Offerors responding to this solicitation must be registered on CCR for their offers to be considered for the award.

ALL contractors MUST register with the Contractor Performance System (CPS). This site will be used to input and store contractor performance. Go to website: http://cps.od.nih.gov. Click on hypertext Registration for Existing contractors listed under the column labeled Contractor Information. Read the information provided on the page and click the hypertext, https://cpscontractor.nih.gov/. This will put you at the login screen of the Contractor Performance System. On the right hand side of screen you will see the question, Registered to the NEW CPS yet? Click here to start process under the word BULLETINS. Click the word #here# which is in hypertext format. Enter the required information to register. If you have any questions, contact CPS support cps-support-1@list.nih.gov at or Jo Ann, Paulette, or Alex at (301) 451-2771.

Vendors shall submit signed and dated offers either by facsimile or overnight delivery (FedEx, UPS, etc). Facsimile numbers are 859-253-0022 or 859-259-0149. Hand-carried offers will not be accepted. Any of the overnight delivery carriers will be accepted with delivery to: UNICOR, Federal Prison Industries, 3301 Leestown Road; Lexington, KY 40511, ATTN: Teresa J. Begley, Contract Specialist. Offers should be submitted on the SF1449. OMB Clearance 1103-0018.

The date and time for receipt of proposals is October 01, 2004 at 2:00 PM Eastern Daylight Time. Offer must indicate Solicitation No. LX-0093-04, time specified for receipt of offer, name, address and telephone number of offeror, technical description of the items being offered in sufficient detail to evaluate compliance with the requirements in the solicitation, terms of any expressed warranty, price and any discount terms. Offer must include a completed copy of representations and certifications at FAR 52.212-3, and acknowledgment of all amendments, if any.

All offers that fail to furnish required representations and certifications, past performance information or reject the terms and conditions of the solicitation may be excluded from consideration.

The Government may make award without discussions; therefore, the offerors initial offer should contain best pricing.

Future requirements from a UNICOR factory may be added to the ensuing contract if considered to fall within the scope of work and the price is determined to be fair and reasonable.

Award(s) will be made based on best value to the Government with past performance significantly more important than price. NO INCREMENTAL PRICING WILL BE ACCEPTED.

Any amendments hereby issued to this solicitation shall be synopsized in the same manner as this solicitation and must be acknowledged by each offeror. Offeror must hold prices firm for 60 calendar days from the date specified for receipt of offers. Offers or modifications to offers received at the address specified for the receipt of offers after the exact time specified may not be considered.

Questions regarding this requirement may be addressed in writing to Teresa J. Begley, tbegley@central.unicor.gov.

See Note 1.

DWG. NO. A3019069

NOTE: DATA MARKED WITH AN ASTERISK (*) IS PECULIAR TO A PRIOR MANUFACTURER. IT DOES NOT TAKE PRECEDENCE OVER ANY OTHER DATA ON THIS DRAWING, AND IS NOT CONTRACTUALLY BINDING ON EITHER THE CONTRACTOR OR THE GOVERNMENT.

THIS DOCUMENT HAS BEEN PURCHASED BY THE GOVERNMENT AND MAY BE REPRODUCED AND USED IN CONNECTION WITH ANY GOVERNMENT PROCUREMENT OR MAINTENANCE OPERATION.

APPLICATION		REVISIONS			
NEXT ASSY	USED ON	LTR	DESCRIPTION	DATE	APPROV
A3014551-1	DLA3014551-1	G	REVISED AND REDRAWN REPLACES REV F WITH CHANGES PER EC 289590 T.W. BATES		84-C-K5
		H	REVISED PER ECP E2GG004-948, NOR 010 AND EC 377150	6-21-95	K. P. Vac 84-C-K5 LC-PR-5R

CAUTION
OBSERVE PRECAUTIONS FOR HANDLING ELECTROSTATIC DISCHARGE SENSITIVE ITEMS

SOURCE CONTROL DRAWING

DASH 1 AS SHOWN

REVISION																				
SHEET	21	22	23	24	25	26	27	28	29	30	31	32	33	34	35	36	37	38	39	40
REVISION	H	G	D	F	E	G	A	E	A	H	A	A	A	B	A					
SHEET	1	2	3	4	5	6	7	8	9	10	11	12	13	14	15	16	17	18	19	20

ITT AEROSPACE/OPTICAL DIVISION
FSCM NO. 31550
DAAB07-78-C-0150

U.S. ARMY COMMUNICATIONS - ELECTRONICS COMMAND
FORT MONMOUTH, NEW JERSEY 07703

DWN	K. PADFIELD 89-09-28	ENGR	ERIC ZAYAS 89/09/28
CHKD	DON SIMON 89-09-28		M. CLOUSER 89/09/28

CECOM

REVIEWED

APPROVED

DATE

ELECTRONIC COMPONENTS ASSEMBLY - AMPLIFIER MODULE ASSEMBLY

SIZE	FSCM NO.	DWG. NO.
A	80063	A3019069 PCC 0135

SCALE NONE

SHEET 1 OF 15

SINC

1. SCOPE

This specification defines the requirements for an active amplifier assembly. The assembly shall contain a voltage regulator, a loudspeaker amplifier, handset amplifier and a buffering amplifier.

2. APPLICABLE DOCUMENTS

2.1 Issues of documents. The following documents of the issue in effect on the date of solicitation form a part of this specification to the extent specified herein.

STANDARDS

Military

MIL-STD-105	Sampling Procedures for Inspection
MIL-STD-202	Test Methods for Electronic and Electrical Component Parts

SPECIFICATION

Military

MIL-I-46058	Insulating Compound, Electrical (for coating printed circuit assemblies) General Specification for
MIL-M-55565	Microcircuits, Packaging of

Industry

IPC-S-815	General Requirements for Soldering Electronic Interconnections

2.2 Order of precedence. In the event of conflict between the requirements of this specification and those listed, the requirements of this specification shall govern.

3. REQUIREMENTS

3.1 General. Devices supplied to this specification shall meet the requirements of this specification.

SINC

3.1.1 Design, materials and processes. The design, materials, and processes used in the construction of devices supplied to this specification shall be qualified by passing the inspection of 4.4 before any such devices are supplied under contract. In the event of a change to the design, materials, or processes the source of supply shall be requalified by passing the inspection of 4.4. There shall be no change to design, materials, or processes that affect the mechanical or electrical form, fit, or function of the device without prior written approval of the procuring activity.

3.1.2 Screening. All devices supplied to this specification shall be capable of meeting the electrical requirements over the temperature range of -40°C to +85°C after being subjected to the screening of paragraphs 4.3.1, 4.3.2, and 4.3.3.

3.2 Materials. All materials and component parts used in the construction of devices supplied to this specification shall be capable of surviving storage and operating temperatures between -51°C and +85°C. Any exposed metal surfaces of the device shall be passivated or otherwise protected from oxidation and degradation. The electrical components of the device shall be coated with a material as specified in MIL-I-46058. No coating is allowed on the reverse side (heatsink) of the device.

3.2.1 Connector pin plating. The 0.025 square pin connector shall have gold plating in the contact area with at least a nominal thickness of 30 microinches.

3.3 Electrical.

3.3.1 Schematic. Devices supplied to this specification shall be built in accordance with the schematic as shown in Figure 2.

3.3.2 Electrical performance. Devices supplied to this specification shall meet the characteristics specified in Table I when tested using the set-up specified in Figure 3.

3.3.3 Burn-in Test. Units supplied to this specification shall suffer no degradation when subjected to test number 4 from Table I for 4 hours continuous operation at an ambient temperature of 85°C, except that Pin 1 shall be at 32 VDC.

3.4 Mechanical.

3.4.1 Mechanical dimensions. Case and mounting dimensions shall conform to Figure 1.

3.4.2 Thermal Conductivity. The materials and processes used in the construction of devices supplied to this specification shall be such as to maintain the maximum junction temperature of the LM317 voltage regulator at less than 110°C while the regulator is dissipating 2.82 Watts with the reverse side of the device (3.4 x 1.73 inches) at 85°C. This requirement shall be fulfilled by providing thermal calculations for the LM317 junction temperature at the time of qualification and at each requalification per paragraphs 3.1.1 and 4.4.

3.4.3 Mechanical Integrity. Devices supplied to this specification shall suffer no mechanical damage when mounted as specified in paragraph 4.3.1.

SINC

3.5 Environmental.

3.5.1 Operating temperature. Devices supplied to this specification shall meet the electrical performance inspection in paragraph 4.3.4 herein throughout the temperature range from -40°C to +85°C.

3.5.2 Storage temperature. Devices supplied to this specification shall not degrade due to exposure to storage temperatures from -51°C to +85°C.

3.6 Marking.

3.6.1 Markings. Devices supplied to this specification shall be marked with the following items:

a. Part identification number: A3019069-1
b. FSCM number: 80063
c. Pin one designator
d. Lot date code
e. ESD identifier

3.6.2 Marking permanency. All markings (on parts) shall remain permanent and legible after being subjected to the tests specified in MIL-STD-202, Method 215.

3.7 Workmanship. Devices supplied to this specification shall be processed in such a manner as to be uniform in quality and shall be free from defects that will affect life.

3.7.1 Soldering. All soldering and workmanship shall conform to the applicable requirements specified in ANSI IPC-S-815, class II.

4. QUALITY ASSURANCE PROVISIONS

4.1 Responsibility for inspection. The manufacturer is responsible for the performance of all inspections specified herein. The procuring activity reserves the right to perform any of the inspections set forth in the specification where such inspections are deemed necessary to assure supplies and services conform to prescribed requirements.

4.1.1 Test equipment and inspection facilities. Test and measuring equipment, and inspection facilities shall be of sufficient accuracy, quality and quantity to permit performance of the required inspections. These shall be established and maintained by the supplier.

4.2 Visual inspection. All devices supplied to this specification shall be inspected for conformance to the requirements of paragraphs 3.6.1 and 3.7.

4.3 Performance inspections. All devices supplied to this specification shall pass the quality conformance inspection of paragraph 4.5. Qualification test units shall pass the qualification inspection of paragraph 4.4 in order to qualify the manufacturer as an approved source of supply.

SINC

4.3.1 Mechanical Integrity Inspection. The devices to be tested shall be mounted to an aluminum plate using the two mounting holes in the device and the appropriate M3 hardware consisting of an M3 screw, flat washer, and split lock washer. The screw shall be tightened to a torque of 10 inch-pounds and then removed. The devices shall then be inspected for mechanical damage and compliance with 3.4.3 This inspection shall be performed before any electrical or thermal screening tests are performed as defined in 3.3.2 and 4.3.2. This inspection need only be performed as part of the qualification inspection of paragraph 4.4.

4.3.2 Thermal Screening. Thermal screening shall consist of 10 cycles of thermal stress from -40°C to +85°C. Thermal cycling shall be accomplished by moving the devices from an ambient maintained at one temperature extreme to another ambient maintained at the other extreme. Devices shall remain at an extreme temperature for at least 15 minutes, or until the device temperature has stabilized to within 3 degrees C of the ambient temperature to which it is exposed. One cycle shall consist of the required exposure time at one temperature extreme, then immediate transfer to the other extreme for the required exposure time. This screening shall be performed on every device supplied to this specification.

4.3.3 Burn-in Screening. Devices shall be subjected to Test 4 of Table 1, for 4 hours of continuous operation at an ambient temperature of 85°C, except that the voltage on pin 1 shall be 32VDC. This screening need only be performed as part of the qualification inspection of paragraph 4.4.

4.3.4 Electrical Performance Inspection. Devices supplied to this specification shall be tested per the conditions of Table 1 and meet the limits specified therein while configured as shown in Figure 3.

4.4 Qualification inspection. Qualification inspection shall consist of the mechanical integrity inspection of paragraph 4.3.1, the thermal screening of paragraph 4.3.2, the burn-in screening of paragraph 4.3.3, and the electrical performance inspection of paragraph 4.3.4. Testing shall be performed in the previously stated order. The electrical performance inspection shall be performed at the temperature extremes of -40°C and +85°C as well as at 25°C. The acceptance level for the qualification inspection shall be the same as for normal 4% AQL for single sampling plans as specified in MIL-STD-105, except that all units submitted to the qualification inspection shall be tested. Minimum lot size shall be 13 devices. The thermal conductivity calculations as defined in paragraph 3.4.2 shall be provided as part of the qualification inspection.

4.5 Quality conformance inspection. Quality conformation inspection shall consist of the thermal screening of paragraph 4.3.2 and the electrical performance inspection of paragraph 4.3.4 and shall be performed in that order. Electrical tests shall be performed at 25°C ± 5°C.

5. PREPARATION FOR DELIVERY

5.1 Packaging. The packaged device shall be packaged in shipping containers in a manner that will afford adequate protection from damage during direct shipment from the supply source to the first receiving activity. Each unit container shall be suitable for ESD protection in accordance with MIL-M-55565 and shall be labeled as ESD sensitive.

5.2 Packing. The packaged device shall be packed in shipping containers in a manner that will afford adequate protection from damage during direct shipment from the supply source to the first receiving activity. These packs shall conform to the applicable carrier rules and regulations.

5.3 Package marking. In addition to any special marking required by the purchase order, each unit package exterior container shall be clearly and legibly marked with at least the manufacturers name or symbol, the part identification number and the procuring activity's purchase order number.

6. NOTES

6.1 Approved source(s) of supply. Identification of the approved source(s) of supply hereon is not to be construed as a guarantee of present or continued availability as a source of supply for the item(s).

(A) CTS Knights Inc.
400 Reimann Avenue
Sandwich, Illinois 60548-1846

(B)

CAGE: 75378

	A	B
PART IDENTIFICATION NUMBER	VENDOR PART NO.	VENDOR PART NO.
A3019069-1	95651918-01	

6.2 Only the item described on this drawing when procured from the vendor(s) listed hereon is approved by the Design Activity for use in the application(s) specified hereon. A substitute item shall not be used without prior approval by the Design Activity.

SINC

Table I. Test Requirements

Test No.	Parameter	Conditions	Limits Min	Limits Max
1	Power Supply Current	PIN 1=32Vdc PIN 11=0Vrms measure current into PIN 1	-	50 mAdc
2	Vcc	PIN 1=21Vdc Output=PIN 3 to GND	17.8Vdc	18.2Vdc
3	Buffered Audio	Pin 1=21Vdc Output=Pin 12 to GND Pin 11=0.78Vrms, 1kHz	1.71Vrms	1.91Vrms
4	Speaker Output	Pin1=21Vdc Output=Pin 8 to Pin 9 Pin 11=0.78Vrms, 1kHz	8.25Vrms	-
5	Speaker Distortion	Pin 1=21Vdc Output=Pin 8 to Pin 9 Adjust Pin 11 to get 8Vrms from Pin 8 to Pin 9	-	3%
6	Speaker Frequency Response 3kHz	Pin 1=21Vdc Output=Pin 8 to Pin 9 Pin 11=0.78Vrms, 3kHz 0 dB ref is level out at 1 kHz	-1 dB	+1 dB
7	Speaker Frequency Response 300Hz	Pin 1=21Vdc Pin 11=0.78Vrms, 300Hz 0 dB ref is level out at 1 kHz	-1	+1dB
8	Handset Output	Pin 1=21Vdc Pin 11=0.78Vrms, 1kHz Output=Pin 7 to GND	3.19Vrms	3.89Vrms
9	Handset Distortion	Pin 1=21Vdc Pin 11=0.78Vrms, 1kHz Output=Pin 7 to GND	-	3%
10	Handset Freq Response, 3kHz	Output=Pin 7 to GND Pin 11=0.78Vrms, 3kHz Pin 1=21Vdc 0 dB ref=output level at 1 kHz	-1 dB	+1 dB
11	Handset Freq Response, 300Hz	Output=Pin7 to GND Pin 11=0.78Vrms, 300Hz Pin 1=21Vdc 0 dB ref=output level at 1 kHz	-1 dB	+1dB

DRSEL-ED Form 01-1 1 Jul 82

SIZE	FSCM NO.	DWG. NO.
A	80063	A3019069
SCALE NONE	LTR A	SHEET 7

HISA FM 1467-1-82

SINC

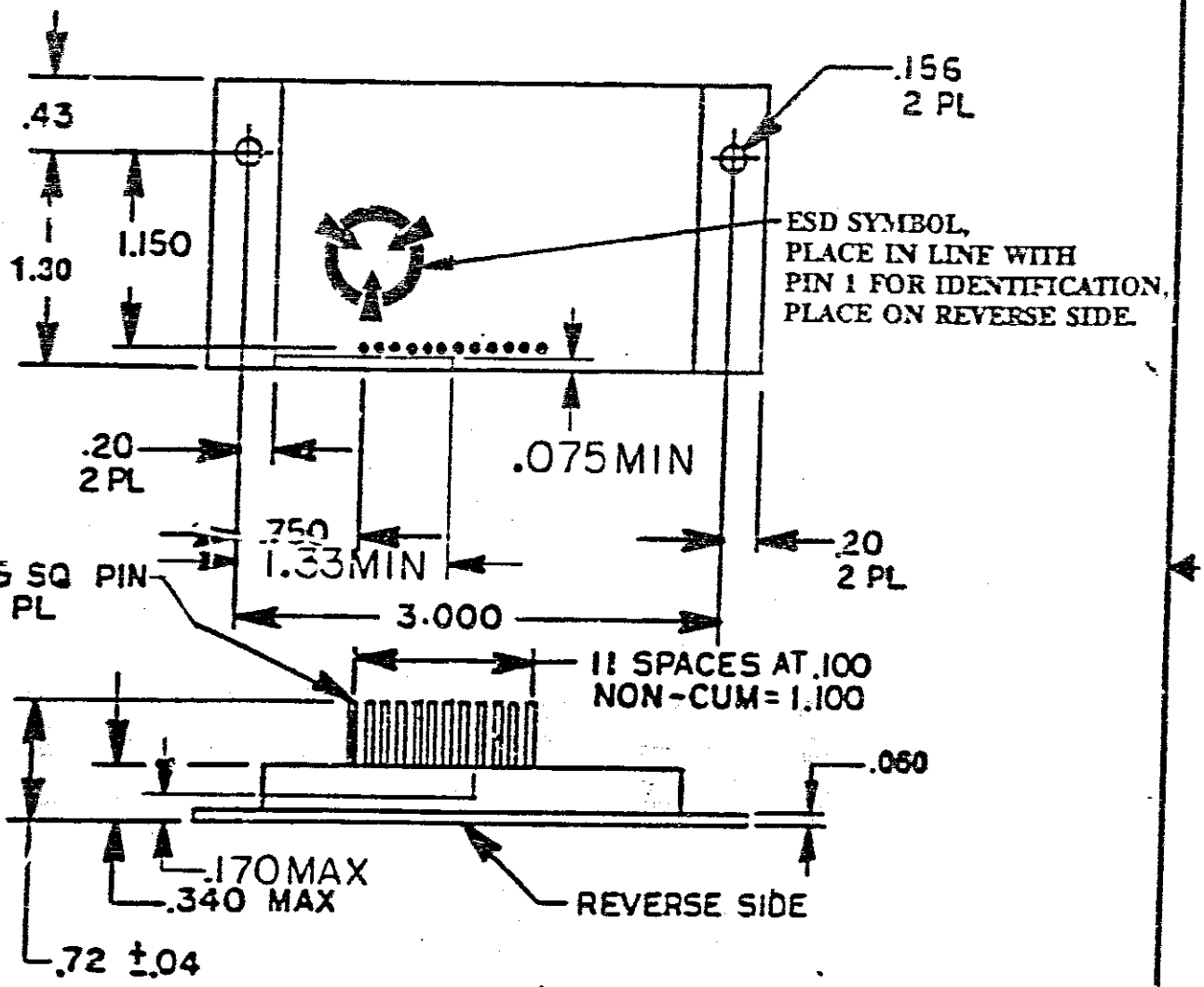

Figure 1. Configuration and Dimensions

UNLESS OTHERWISE SPECIFIED DIMENSIONS ARE IN INCHES AND INCLUDE CHEMICALLY APPLIED OR PLATED FINISHES DO NOT SCALE PRINT TOLERANCES		
DECIMALS		ANGLE
2 PLACE	3 PLACE	
±.02	±.010	±1/2°

SIZE	FSCM NO.	DWG. NO.	
A	80063	A3019069	
SCALE NONE	LTR E	SHEET 8	

DRBEL-ED Form 01-1 1 Jul 82

HISA-FM 1407-1-82

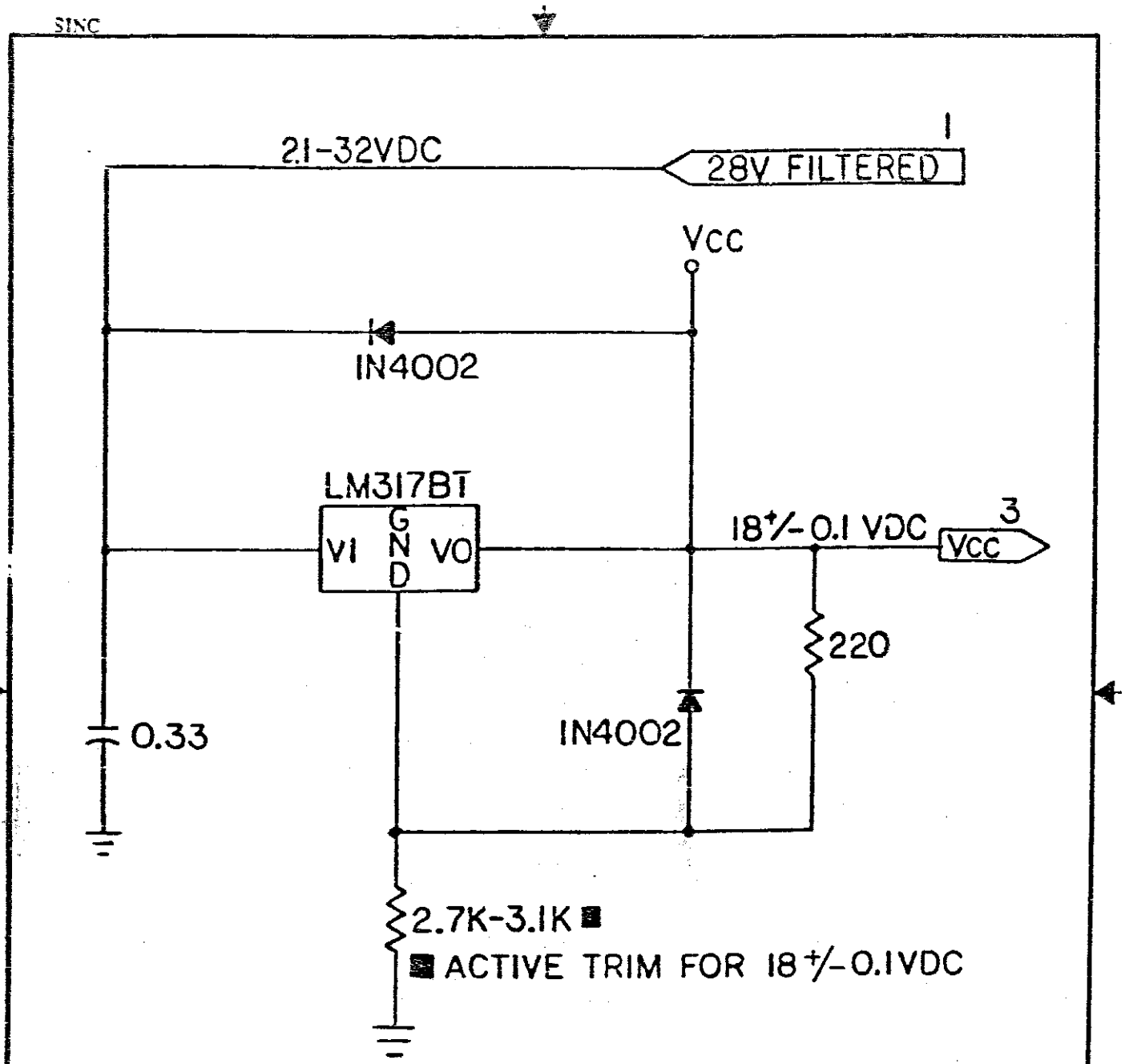

Figure 2. Schematic Diagram

SIZE	FSCM NO.	DWG. NO.
A	80063	A3019069
SCALE NONE	LTR A	SHEET 9

DRSEL-ED Form 01-1 1 Jul 82

HISA-FM 1467-1-82

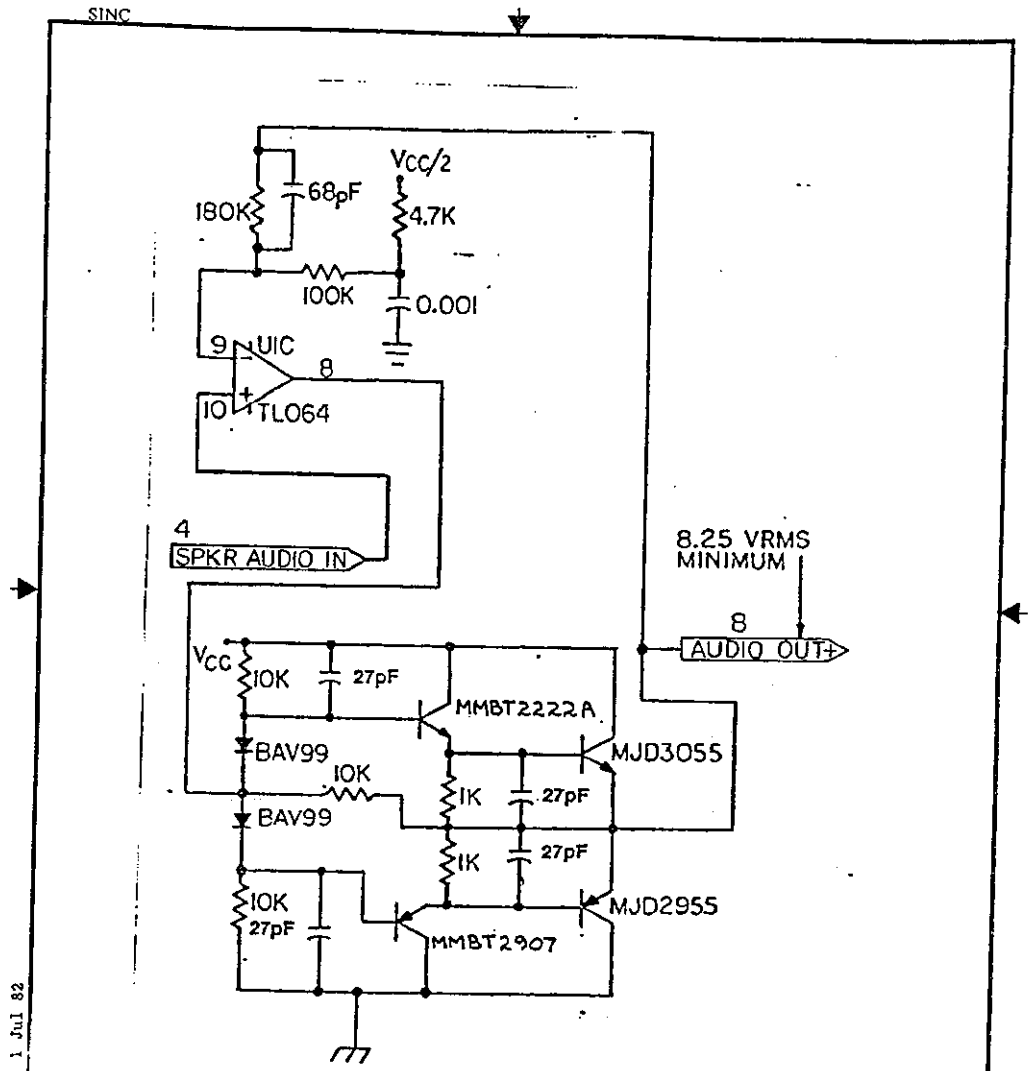

Figure 2 (continued). Schematic Diagram

SIZE	FSCM NO.	DWG. NO.
A	80063	A3019069
SCALE NONE	LTR H	SHEET 10

DRSEL-ED Form 01-1 1 Jul 82

HISA-FM 1487-1-82

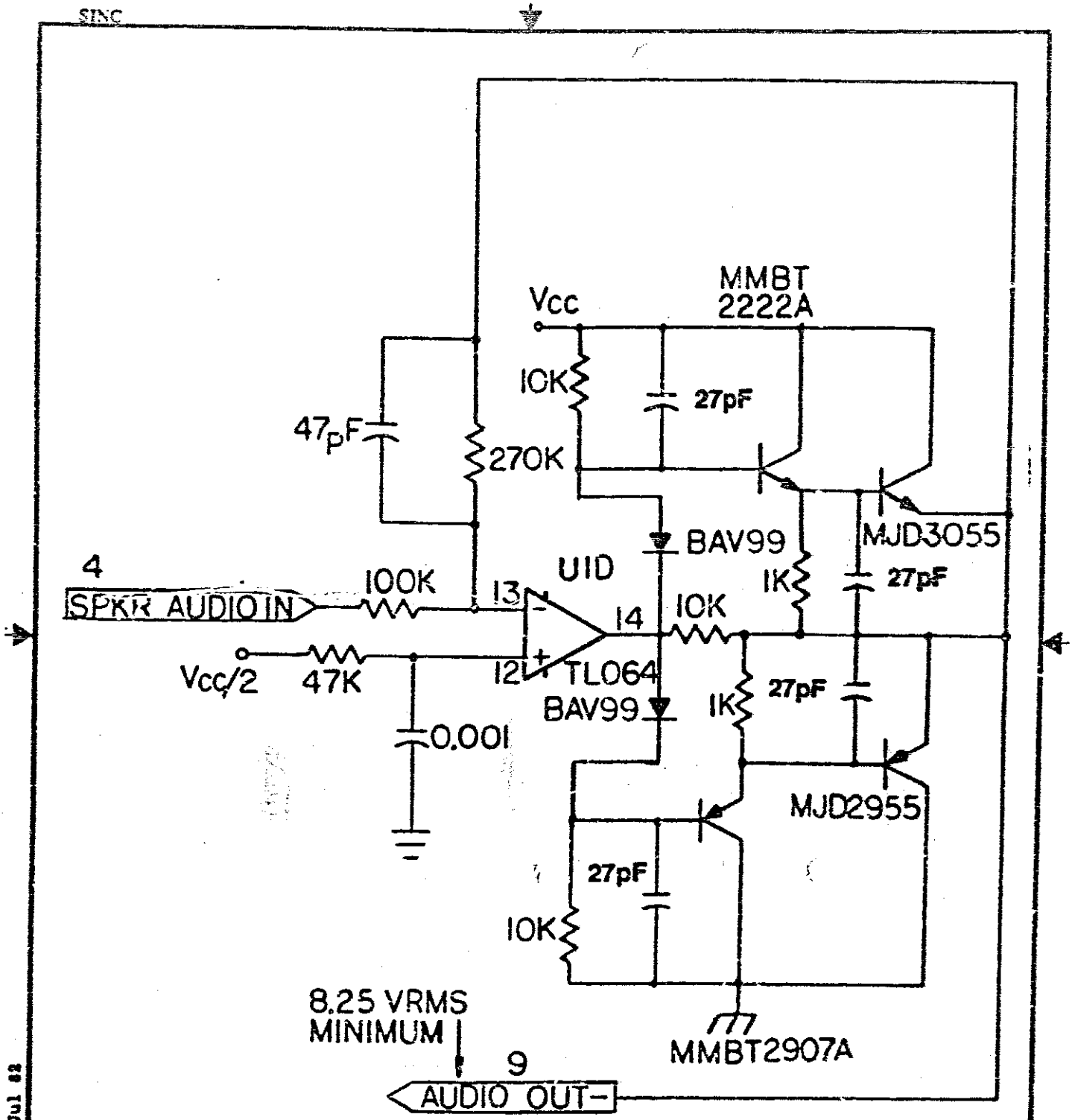

Figure 2 (continued). Schematic Diagram

SIZE	FSCM NO.	DWG. NO.
A	80063	A3019069
SCALE NONE	LTR A	SHEET 11

DRSEL-ED Form 01-1 1 Jul 82

HISA-FM 1407-1-82

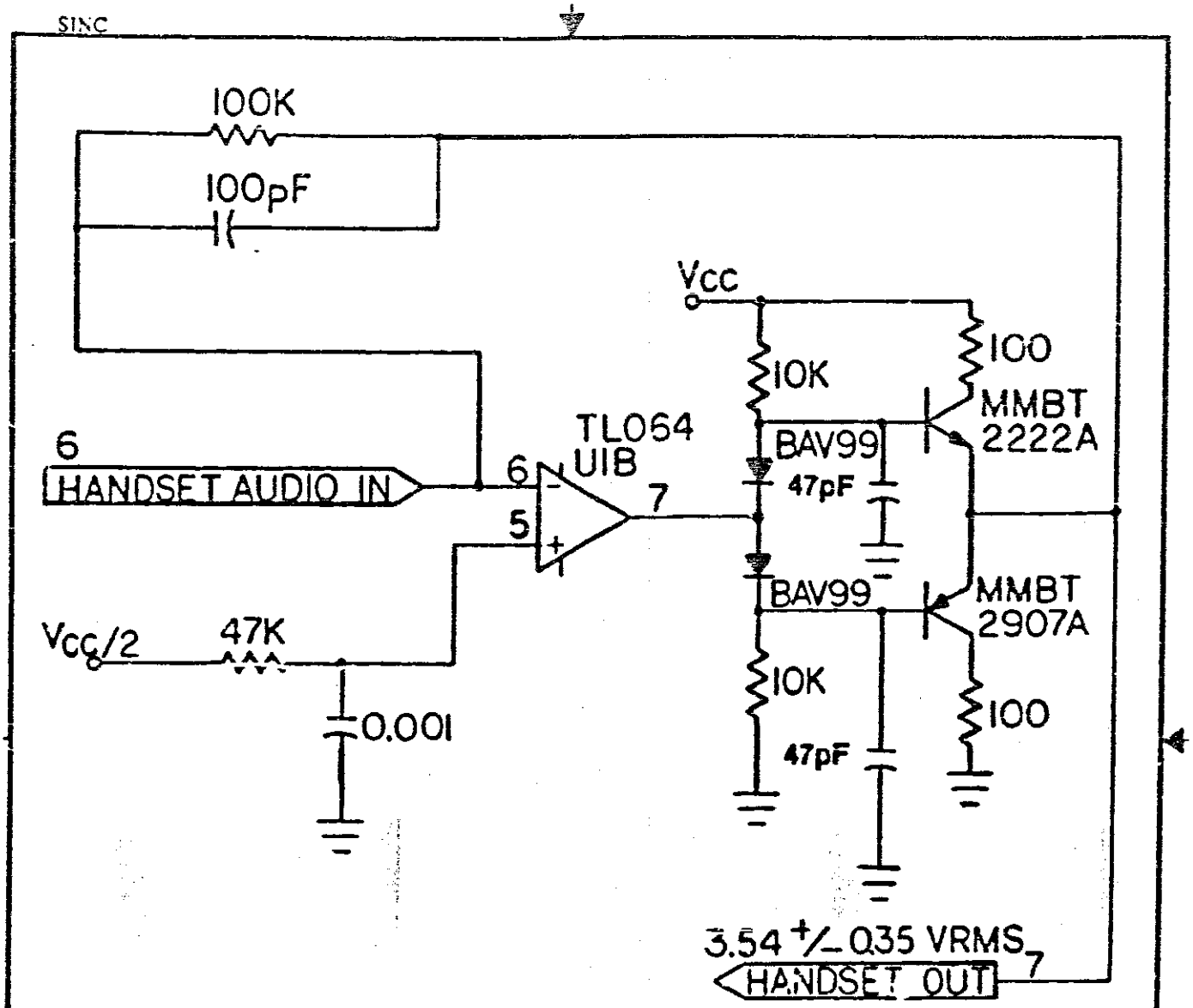

Figure 2 (continued). Schematic Diagram

SIZE	FSCM NO.	DWG. NO.
A	80063	A3019069
SCALE - NONE	LTR A	SHEET 12

DRSEL-ED Form 01-1 1 Jul 82

USA-PM 1467-1-82

SINC

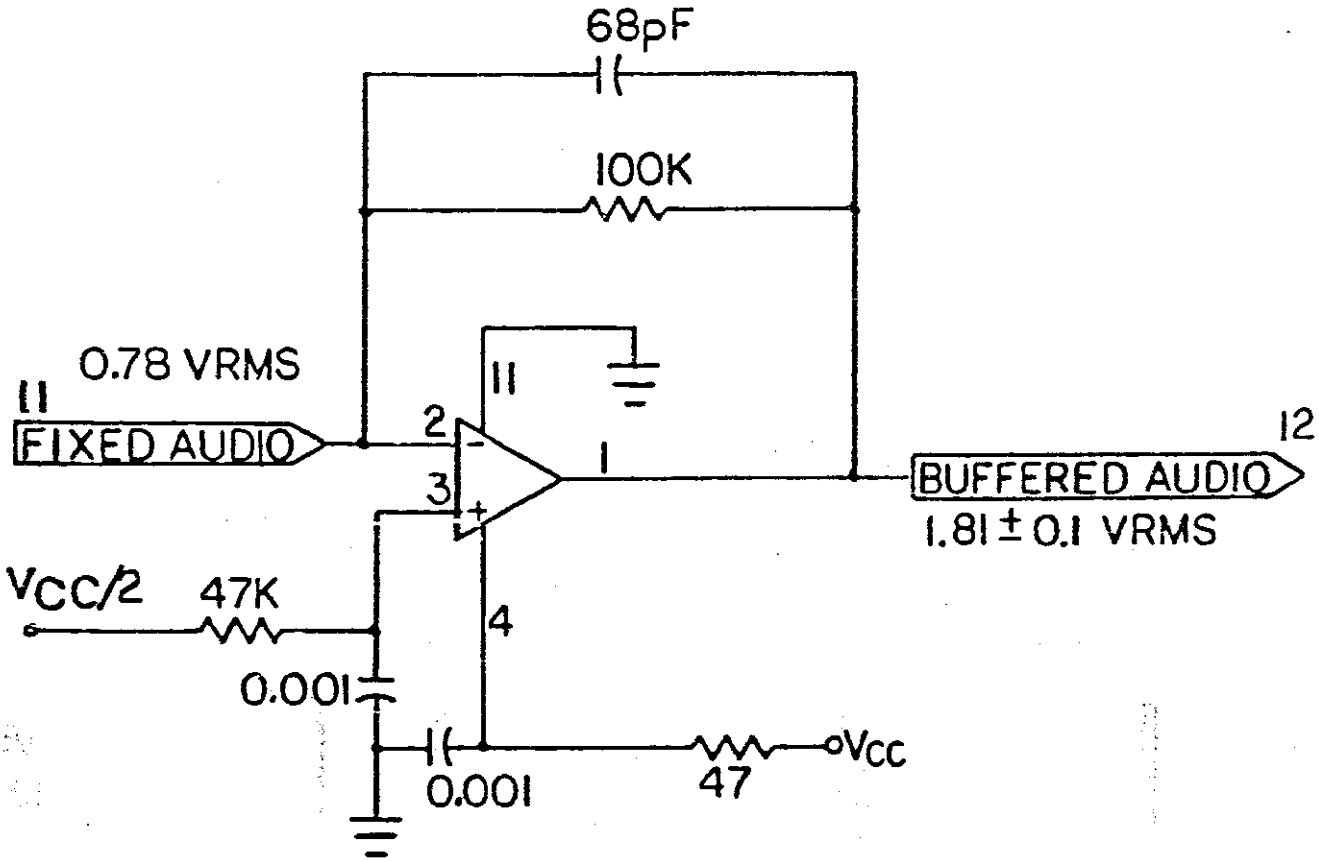

Figure 2 (continued). Schematic Diagram

SIZE	FSCM NO.	DWG. NO.
A	80063	A3019069
SCALE NONE	LTR A	SHEET 13

DRSEL-ED Form 01-1 1 Jul 82

HISA-FM 1407-1-82

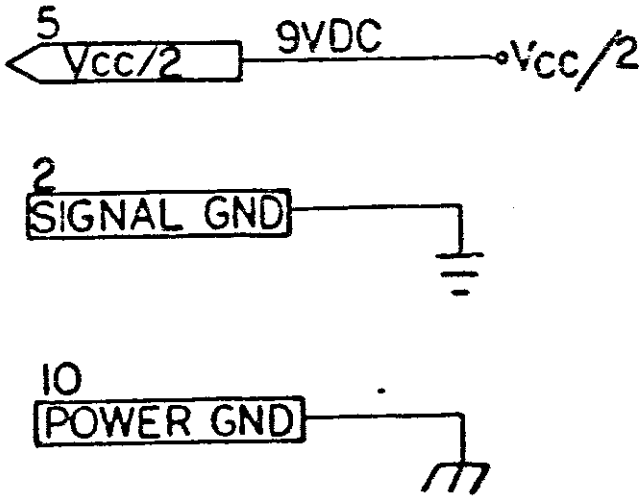

1. IC sections may be swapped to facilitate layout.
2. All capacitors shown in µF unless otherwise noted.
3. All resistances shown in ohms unless otherwise noted.
4. All capacitors are 10% 50V parts.
5. All resistors are 1% 1/8 watt unless otherwise noted.
6. All parts shall operate over the temperature range of −40°C to +85°C.
7. Unit shall be packaged with the reverse side electrically isolated from all circuitry.

Figure 2 (continued). Schematic Diagram

SIZE	FSCM NO.	DWG. NO.	
A	80063		A3019069
SCALE NONE	LTR B	SHEET 14	

DRSEL-ED Form 01-1 1 Jul 82
HISA-PM 1467-1-82

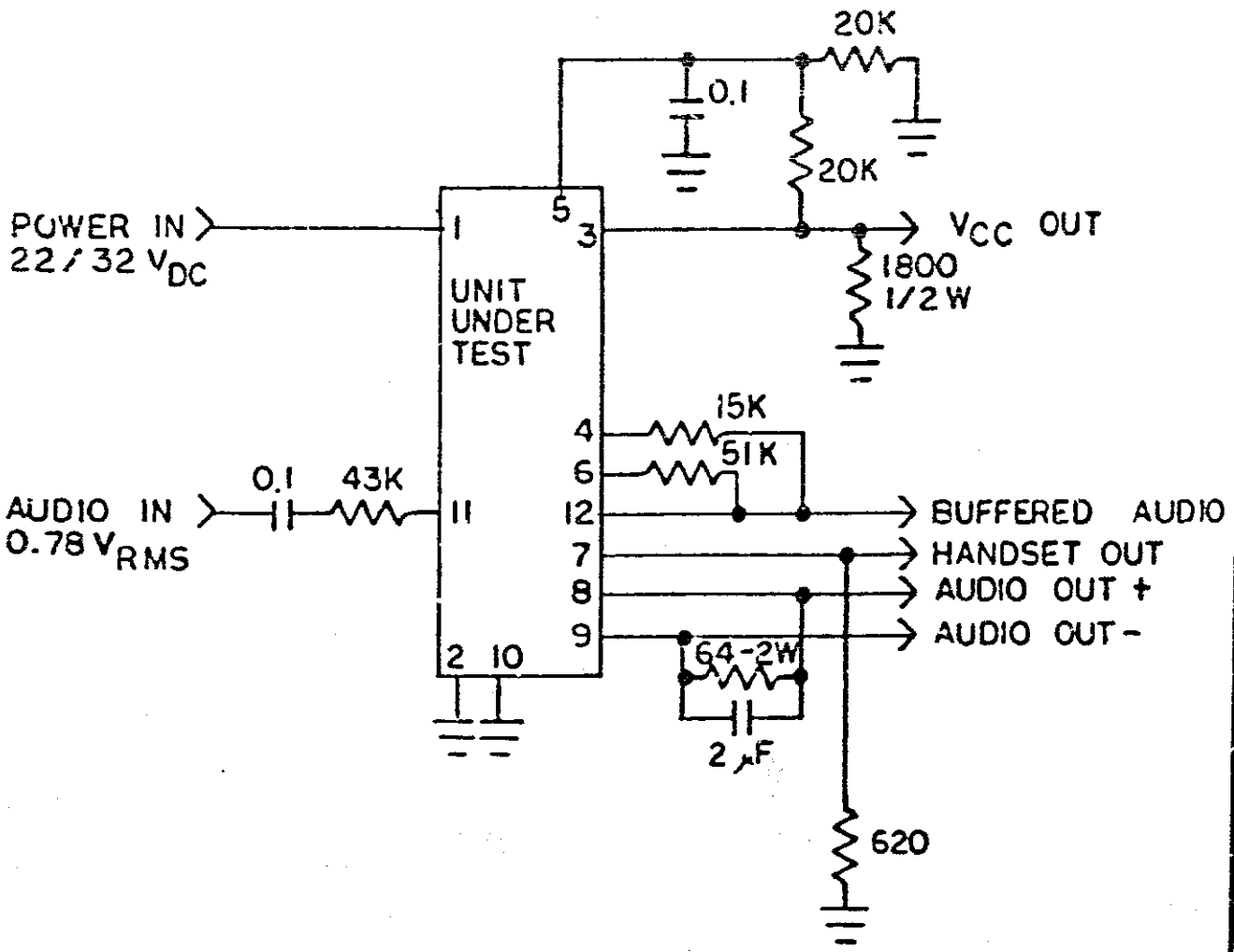

Figure 3. Test Set-up

SIZE	FSCM NO.	DWG. NO.
A	80063	A3019069
SCALE NONE	LTR A	SHEET 15

HISA-PM 1407-1-82

THIS DOCUMENT HAS BEEN PURCHASED BY THE GOVERNMENT AND MAY BE REPRODUCED AND USED IN CONNECTION WITH ANY GOVERNMENT PROCUREMENT OR MAINTENANCE OPERATION.

NOTE: DATA MARKED WITH AN ASTERISK(*) IS PECULIAR TO A PRIOR MANUFACTURER. IT DOES NOT TAKE PRECEDENCE OVER ANY OTHER DATA ON THIS DRAWING, AND IS NOT CONTRACTUALLY BINDING ON EITHER THE CONTRACTOR OR THE GOVERNMENT.

REVISIONS

LTR	DESCRIPTION	DATE	APPROVED
-	INITIAL RELEASE PER EO-78910	90-6-01	
D	REVISED AND REDRAWN REPLACES REV C WITH CHANGE PER EO-239250	95-04-5	84-0-K509

NOTES:

1. PRINTED WIRING BOARD SHALL CONFORM TO IPC-A-600, CLASS 2.
2. THE MASTER PATTERN DRAWING MP-A43948 REV B WILL BE SUPPLIED BY THE US ARMY COMMUNICATIONS-ELECTRONICS COMMAND, FORT MONMOUTH, NEW JERSEY 07703 UPON REQUEST OF THE CONTRACTOR.
3. METRIC DIMENSIONS AND TOLERANCES IN ACCORDANCE WITH ANSI Y14.5-1973, EXCEPT FOR PARAGRAPH 5.7.4.1.
4. DRILLING AND MASTER PATTERNS ARE SHOWN AS VIEWING THE BOARD FROM THE COMPONENT SIDE.
5. SEE HOLE AND COORDINATE CHARTS FOR HOLE SIZES AND LOCATIONS.
6. HOLE IDENTIFICATION NUMBERS ON COORDINATE CHART ARE SHOWN FOR REFERENCE ONLY AND ARE NOT MARKED ON BOARD.
7. ALL DIMENSIONS BETWEEN ZERO (0) INTERSECT LINES AND EDGES OF BOARD MUST BE HELD WITHIN ±0.13.
8. TOLERANCE BETWEEN THE DATUM AND ANY HOLE MUST NOT EXCEED ±.003 INCH UNLESS OTHERWISE SPECIFIED.
9. BOARD THICKNESS SHALL BE .062 ±.007 INCH.
10. SOLDER MASK APPLIED TO LIGHT AREAS ONLY. REFERENCE MP-A43948 SHEET 6.
11. SOLDER MASK SHALL MEET THE REQUIREMENTS OF IPC-SM-840, CLASS 2. FOLLOWING SOLDER MASK APPLICATION, ALL REMAINING EXPOSED CIRCUIT AREAS WILL BE FUSED TIN-LEAD PLATED OR SOLDER COATED.
12. THE INDIVIDUAL BASE LAYER MATERIAL SHALL BE TYPE GFN IN ACCORDANCE WITH MIL-P-13949. THE COPPER FOIL SHALL BE TYPE E IN ACCORDANCE WITH IPC-CF-150. PREPREG BONDING LAYER(S) SHALL BE TYPE GF IN ACCORDANCE WITH MIL-P-13949. EXTERNAL LAYERS SHALL BE 1 OZ COPPER. INTERNAL LAYERS SHALL BE 2 OZ COPPER.
13. INSERT CONTRACTOR'S FSCM NUMBER PER MIL-M-13231, GROUP I (ETCH), 1.7 HIGH CONTRASTING CHARACTERS, LOCATED APPROXIMATELY AS SHOWN, FRONT SIDE.
14. INSERT PRINTED WIRING BOARD MANUFACTURER'S LOGO OR FSCM NUMBER PER MIL-M-13231, GROUP I (ETCH), 1.7 HIGH CONTRASTING CHARACTERS, LOCATED APPROXIMATELY AS SHOWN, REAR SIDE.
15. INSIDE CORNERS OF PRINTED WIRING BOARD PROFILE MAY HAVE .07 INCH MAX RADIUS.

-1 AS SHOWN

QTY REQD	QTY REQD	FIND NO.	FSCM NO.	SIZE	PART NO. OR IDENTIFYING NO.	NOMENCLATURE OR DESCRIPTION	SPECIFICATION	NOTE

PARTS LIST

METRIC

THIRD ANGLE PROJECTION

UNLESS OTHERWISE SPECIFIED DIMENSIONS ARE IN MILLIMETERS AND INCLUDE CHEMICALLY APPLIED OR PLATED FINISHES - DO NOT SCALE PRINT -

TOLERANCES IN MILLIMETERS

DECIMAL DIMENSIONS		ANGULAR DIMENSIONS
X.XX < 150	± 0.25	± 1°
X.X < 150	± 0.50	
X < 150	± 0.75	
X.X > 150 < 600	± 1.0	

REVISION	D	D	D	D	D
SHEET	1	2	3	4	5

SHEET REVISION RECORD

A3142343-1	DLA3142343-1
NEXT ASSEMBLY	USED ON

APPLICATION

MATERIAL: 1

FINISH: ——

ITT AEROSPACE/OPTICAL DIVISION
FSCM NO. 81550
DAAB07-78-C-0150

DRAWN A.O.G.T.
CHECKED
ENGINEER
CECOM
REVIEWED
APPROVED
DATE 7/6/86

U.S. ARMY COMMUNICATIONS - ELECTRONICS COMMAND
FORT MONMOUTH, NEW JERSEY 07703

PRINTED WIRING BOARD - LS-671

PCC0155

SIZE	FSCM NO.	DWG NO.
C	80063	A3142344

SCALE 2/1 | SHEET 1 OF 5

WHEN REFERRING TO THIS DRAWING STATE DRAWING NO., APPLICABLE ISSUE LETTER IF ANY, AND DATE

A3142344

REVISIONS			
LTR	DESCRIPTION	DATE	APPROVED
-	INITIAL RELEASE PER EC-78910	90-6-01	
D	REVISED AND REDRAWN REPLACES REV C WITH CHANGE PER EC-239250 D. Allison	93-04-15	H. Vuel 84-C-K503

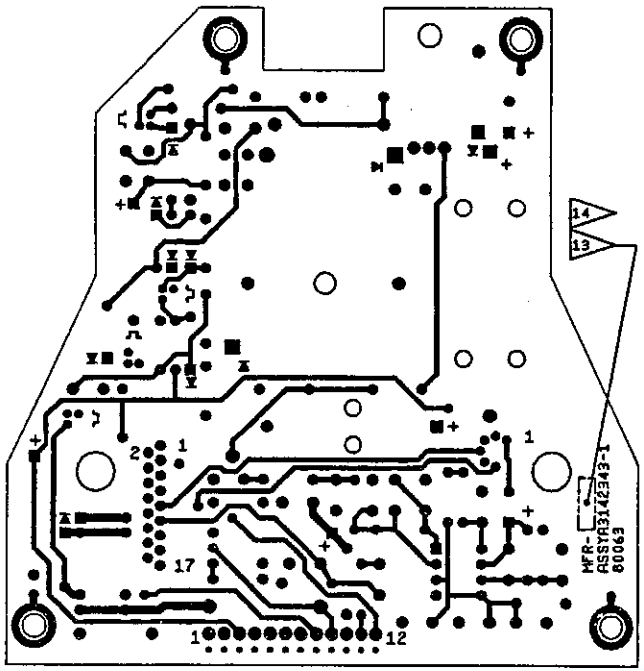

SIZE	FSCM NO.	DWG NO.
C	80063	A3142344
SCALE 2/1		SHEET 2

REV D

DWG NO. A3142344

MAR-1993 08:51:56.30

REVISIONS			
LTR	DESCRIPTION	DATE	APPROVED
-	INITIAL RELEASE PER EC-78910	90-6-01	
D	REVISED AND REDRAWN REPLACES REV C WITH CHANGE PER EC-239250	93-04-16	84-C-R503

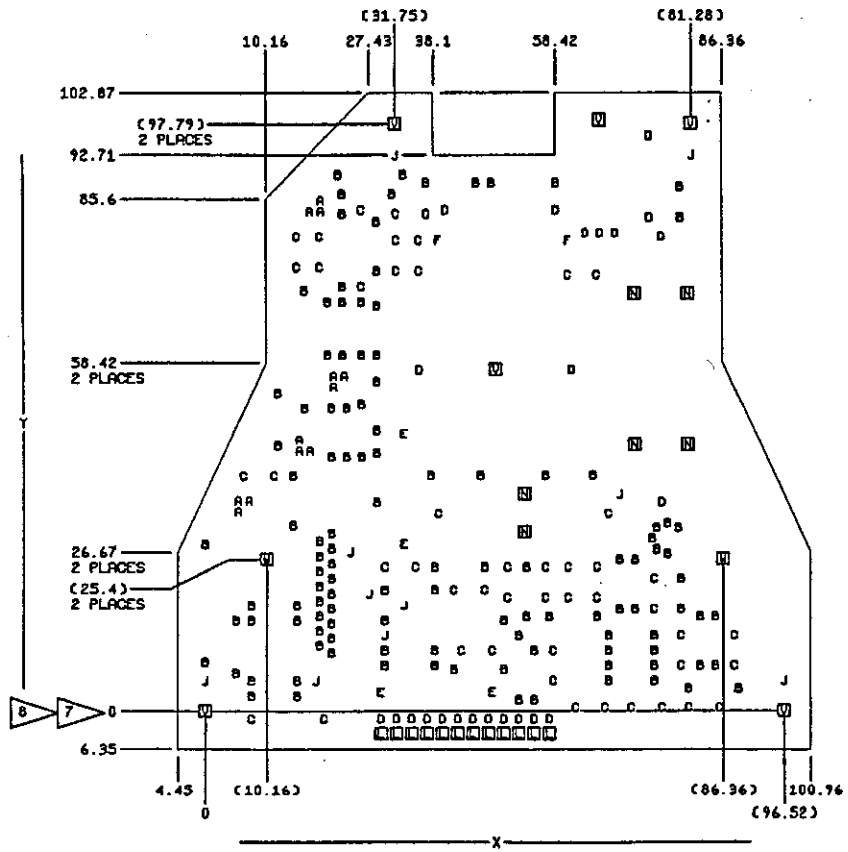

HOLE CHART HOLE SIZES ARE IN INCHES			
SYMBOL	DIA TOL±.003	REMARKS	QTY
UNSUPPORTED (NONPLATED)			
[A]			
[B]			
[C]			
SUPPORTED (PLATED)			
A	.026		12
B	.034		117
C	.042		48
D	.050		23
E	.058		4
F	.066		2
INTERFACIAL		DIA MAX	
J	.026	MAY BE SOLDER PLUGGED	59
MISC-UNLESS OTHERWISE SPECIFIED: TOL ±.005			
[P]		TOOLING (TOL ±.003) (NONPLATED)	
[N]	.250	MTG (NONPLATED)	2
[V]	.156	MTG (NONPLATED)	6
[N]	.110	MTG (NONPLATED)	6
[C]	.066	MTG (NONPLATED)	12

SIZE	FSCM NO.	DWG NO.
C	80063	A3142344
SCALE 2/1		SHEET 3

REV D
DWG NO. A3142344

REVISIONS			
LTR	DESCRIPTION	DATE	APPPOVED
-	INITIAL RELEASE PER EC-78910	90-6-01	
D	REVISED AND REDRAWN REPLACES REV C WITH CHANGE PER EC-239250	93-04-15	H.V. 84-C-K503

COORDINATE CHART IN INCHES (8)

HOLE IDENT	LOCATION X	LOCATION Y	SYM
1	0.2116	1.3146	A
2	0.2116	1.3854	A
3	0.2823	1.3854	A
4	0.6146	1.7116	A
5	0.6146	1.7823	A
6	0.6854	1.7116	A
7	0.6927	3.2896	A
8	0.7634	3.2896	A
9	0.7634	3.3604	A
10	0.8366	2.1396	A
11	0.8366	2.2104	A
12	0.9073	2.2104	A
13	0.0000	0.3250	B
14	0.0000	1.1000	B
15	0.2000	0.2500	B
16	0.2000	0.6000	B
17	0.3000	0.1000	B
18	0.3000	0.2000	B
19	0.3000	0.6000	B
20	0.3000	0.7000	B
21	0.4750	1.7500	B
22	0.4750	2.1000	B
23	0.5750	1.2250	B
24	0.5750	1.5500	B
25	0.6000	0.1000	B
26	0.6000	0.2000	B
27	0.6000	0.6000	B
28	0.6000	0.7000	B
29	0.6500	2.0000	B
30	0.6500	2.7750	B
31	0.7460	0.4350	B
32	0.7460	0.5330	B
33	0.7460	0.6310	B
34	0.7460	0.7290	B
35	0.7460	0.8270	B
36	0.7460	0.9250	B
37	0.7460	1.0230	B
38	0.7460	1.1210	B
39	0.8000	2.3500	B
40	0.8000	2.7000	B
41	0.8250	0.3860	B
42	0.8250	0.4840	B
43	0.8250	0.5820	B
44	0.8250	0.6800	B
45	0.8250	0.7780	B
46	0.8250	0.8760	B
47	0.8250	0.9740	B
48	0.8250	1.0720	B
49	0.8250	1.1700	B
50	0.8250	1.6750	B
51	0.8250	2.0000	B
52	0.8750	3.5250	B
53	0.9000	2.3500	B
54	0.9000	2.7000	B
55	0.9000	2.8000	B

COORDINATE CHART IN INCHES (8)

HOLE IDENT	LOCATION X	LOCATION Y	SYM
56	0.9000	3.2750	B
57	0.9000	3.4000	B
58	0.9250	1.6750	B
59	0.9250	2.0000	B
60	1.0250	1.6750	B
61	1.0250	2.0250	B
62	1.0250	2.3500	B
63	1.0250	2.7000	B
64	1.1250	1.3750	B
65	1.1250	1.7000	B
66	1.1250	1.8500	B
67	1.1250	2.1750	B
68	1.1250	2.3500	B
69	1.1250	2.6750	B
70	1.1250	2.9000	B
71	1.1250	3.2250	B
72	1.1750	0.3000	B
73	1.1750	0.4000	B
74	1.1750	0.6000	B
75	1.1750	0.8000	B
76	1.2250	3.4000	B
77	1.3000	3.5250	B
78	1.4500	3.4750	B
79	1.4750	1.5500	B
80	1.5000	0.3000	B
81	1.5000	0.4000	B
82	1.5000	0.8000	B
83	1.5000	0.9500	B
84	1.6250	0.2750	B
85	1.7750	3.4750	B
86	1.8000	1.5500	B
87	1.8250	0.9500	B
88	1.8750	3.4750	B
89	1.9500	0.2750	B
90	1.9500	0.6000	B
91	2.0500	0.0750	B
92	2.0500	0.5000	B
93	2.1000	0.6250	B
94	2.1000	0.9500	B
95	2.1500	0.0750	B
96	2.1500	0.4000	B
97	2.2250	1.5500	B
98	2.2500	0.6250	B
99	2.3000	3.4750	B
100	2.5500	1.5500	B
101	2.5750	0.6250	B
102	2.6500	0.2000	B
103	2.6500	0.3000	B
104	2.6500	0.4000	B
105	2.6500	0.5000	B
106	2.7250	0.6750	B
107	2.7250	1.0000	B
108	2.8250	0.6750	B
109	2.8250	1.0000	B
110	2.9370	1.1370	B

COORDINATE CHART IN INCHES (8)

HOLE IDENT	LOCATION X	LOCATION Y	SYM
111	2.9500	0.2000	B
112	2.9500	0.3000	B
113	2.9500	0.4000	B
114	2.9500	0.5000	B
115	2.9660	1.0660	B
116	2.9660	1.2080	B
117	3.0370	1.0370	B
118	3.0370	1.2370	B
119	3.1080	1.2080	B
120	3.1250	0.6750	B
121	3.1250	0.8750	B
122	3.1250	3.2500	B
123	3.1250	3.4500	B
124	3.1750	0.1500	B
125	3.2500	0.3000	B
126	3.2500	0.6250	B
127	3.3500	0.3000	B
128	3.3500	0.6250	B
129	3.5000	0.1500	B
130	0.2500	1.5500	C
131	0.3000	-0.0500	C
132	0.4500	1.5500	C
133	0.6000	2.9250	C
134	0.6000	3.1250	C
135	0.7500	2.9250	C
136	0.7500	3.1250	C
137	0.7750	-0.0500	C
138	1.0250	2.8000	C
139	1.0250	3.3000	C
140	1.1750	0.9500	C
141	1.2500	2.9000	C
142	1.2500	3.1000	C
143	1.2500	3.2750	C
144	1.3750	0.9500	C
145	1.4000	2.9000	C
146	1.4000	3.1000	C
147	1.4500	3.2750	C
148	1.5250	1.3000	C
149	1.6250	0.8000	C
150	1.6750	0.4000	C
151	1.8250	0.8000	C
152	1.8750	0.4000	C
153	1.9750	0.7500	C
154	1.9750	0.9500	C
155	2.2250	0.7500	C
156	2.2250	0.9500	C
157	2.2750	0.2000	C
158	2.2750	0.4000	C
159	2.3750	0.7500	C
160	2.3750	0.9500	C
161	2.3750	2.8750	C
162	2.4250	0.0250	C
163	2.5750	0.7500	C
164	2.5750	0.9500	C
165	2.5750	2.8750	C

COORDINATE CHART IN INCHES (8)

HOLE IDENT	LOCATION X	LOCATION Y	SYM
166	2.6250	0.0250	C
167	2.6500	1.3000	C
168	2.8000	0.0250	C
169	2.9500	0.6750	C
170	2.9500	0.8750	C
171	3.0000	0.0250	C
172	3.1250	0.3000	C
173	3.1250	0.5000	C
174	3.1750	0.0250	C
175	3.3750	-0.0250	C
176	3.4750	0.3000	C
177	3.4750	0.5000	C
178	1.1500	-0.0500	D
179	1.2500	-0.0500	D
180	1.3500	-0.0500	D
181	1.4000	2.2500	D
182	1.4500	-0.0500	D
183	1.5500	-0.0500	D
184	1.5750	3.3000	D
185	1.6500	-0.0500	D
186	1.7500	-0.0500	D
187	1.8500	-0.0500	D
188	1.9500	-0.0500	D
189	2.0500	-0.0500	D
190	2.1500	-0.0500	D
191	2.2500	-0.0500	D
192	2.3000	3.3000	D
193	2.4000	2.2500	D
194	2.5000	3.1500	D
195	2.6000	3.1500	D
196	2.7000	3.1500	D
197	2.9250	3.2500	D
198	2.9250	3.7750	D
199	3.0000	1.3750	D
200	3.0000	3.1250	D
201	1.1500	0.1250	E
202	1.3000	1.1000	E
203	1.3000	1.8250	E
204	1.8750	0.1250	E
205	1.5250	3.1000	F

COORDINATE CHART IN INCHES (8)

HOLE IDENT	LOCATION X	LOCATION Y	SYM
206	2.3750	3.1000	[illegible]
207	0.0000	0.2000	J
208	0.6500	4.8750	J
209	0.6500	5.0250	J
210	0.6500	5.1750	J
211	0.7250	0.2000	J
212	0.8000	4.8750	J
213	0.8000	5.0250	J
214	0.8000	5.1750	J
215	0.9500	1.0500	J
216	1.0000	4.8750	J
217	1.0000	5.0250	J
218	1.0000	5.1750	J
219	1.0750	0.7750	J
220	1.1500	4.8750	J
221	1.1500	5.0250	J
222	1.1500	5.1750	J
223	1.1750	0.5000	J
224	1.2500	3.6500	J
225	1.3000	0.7000	J
226	1.3000	4.8750	J
227	1.3000	5.0250	J
228	1.3000	5.1750	J
229	1.4500	4.8750	J
230	1.4500	5.0250	J
231	1.4500	5.1750	J
232	1.6500	4.8750	J
233	1.6500	5.1750	J
234	1.9000	4.8750	J
235	1.9000	5.1750	J
236	2.1000	4.9630	J
237	2.1000	5.0880	J
238	2.2250	4.9630	J
239	2.2250	5.0880	J
240	2.3500	5.0880	J
241	2.5500	4.8750	J
242	2.5500	5.1750	J
243	2.7000	4.8750	J
244	2.7000	5.1750	J
245	2.7250	1.4250	J

SIZE	FSCM NO.	DWG NO.
C	80063	A314234
SCALE 2/1		SHEET 4

REVISIONS			
LTR	DESCRIPTION	DATE	APPROVED
-	INITIAL RELEASE PER EC-78910	90-6-01	
D	REVISED AND REDRAWN REPLACES REV C WITH CHANGE PER EC-239250	93-04-15	84-C-K503

COORDINATE CHART IN INCHES 8

HOLE IDENT	LOCATION X	LOCATION Y	SYM
246	2.8500	4.8750	J
247	2.8500	5.1750	J
248	3.0000	4.8750	J
249	3.0000	5.1750	J
250	3.2000	3.6500	J
251	3.8000	0.2000	J
252	4.2500	4.8750	J
253	4.2500	5.0250	J
254	4.2500	5.1750	J
255	4.4000	4.8750	J
256	4.4000	5.0250	J
257	4.4000	5.1750	J
258	4.5500	4.8750	J
259	4.5500	5.0250	J
260	4.5500	5.1750	J
261	4.7500	4.9630	J
262	4.7500	5.0880	J
263	4.8750	4.9630	J
264	4.8750	5.0880	J
265	5.0000	5.0880	J
266	1.1500	-0.1500	L
267	1.2500	-0.1500	L
268	1.3500	-0.1500	L
269	1.4500	-0.1500	L
270	1.5500	-0.1500	L
271	1.6500	-0.1500	L
272	1.7500	-0.1500	L
273	1.8500	-0.1500	L
274	1.9500	-0.1500	L
275	2.0500	-0.1500	L
276	2.1500	-0.1500	L
277	2.2500	-0.1500	L
278	2.0875	1.1750	N
279	2.0875	1.4250	N
280	2.8250	1.7500	N
281	2.8250	2.7500	N
282	3.1750	1.7500	N
283	3.1750	2.7500	N
284	0.0000	0.0000	Y
285	1.2500	3.8500	Y
286	1.9000	2.2500	Y
287	2.6000	3.8750	Y
288	3.2000	3.8500	Y
289	3.8000	0.0000	Y
290	0.4000	1.0000	Y
291	3.4000	1.0000	Y

SIZE	FSCM NO.	DWG NO.
C	80063	A3142344
SCALE 2/1		SHEET 5

A3142344 D

31-MAR-1993 09:33:18.94