HARMONY

Planning Guide

UNICOR

INTRODUCTION

Harmony is a comprehensive, modular, freestanding office furniture line. The transitional style and pleasing scale works well with both contemporary and traditional office furnishings. The modular design ensures flexibility in layout and design. Harmony functions in concert with floor to ceiling offices as well as open plan layouts.

A full range of desks, credenzas, bridges and worksurface extensions combine to create a well designed office layout. Add the filing and storage options along with a paper management system and desk accessories and you can create an office to meet almost any need.

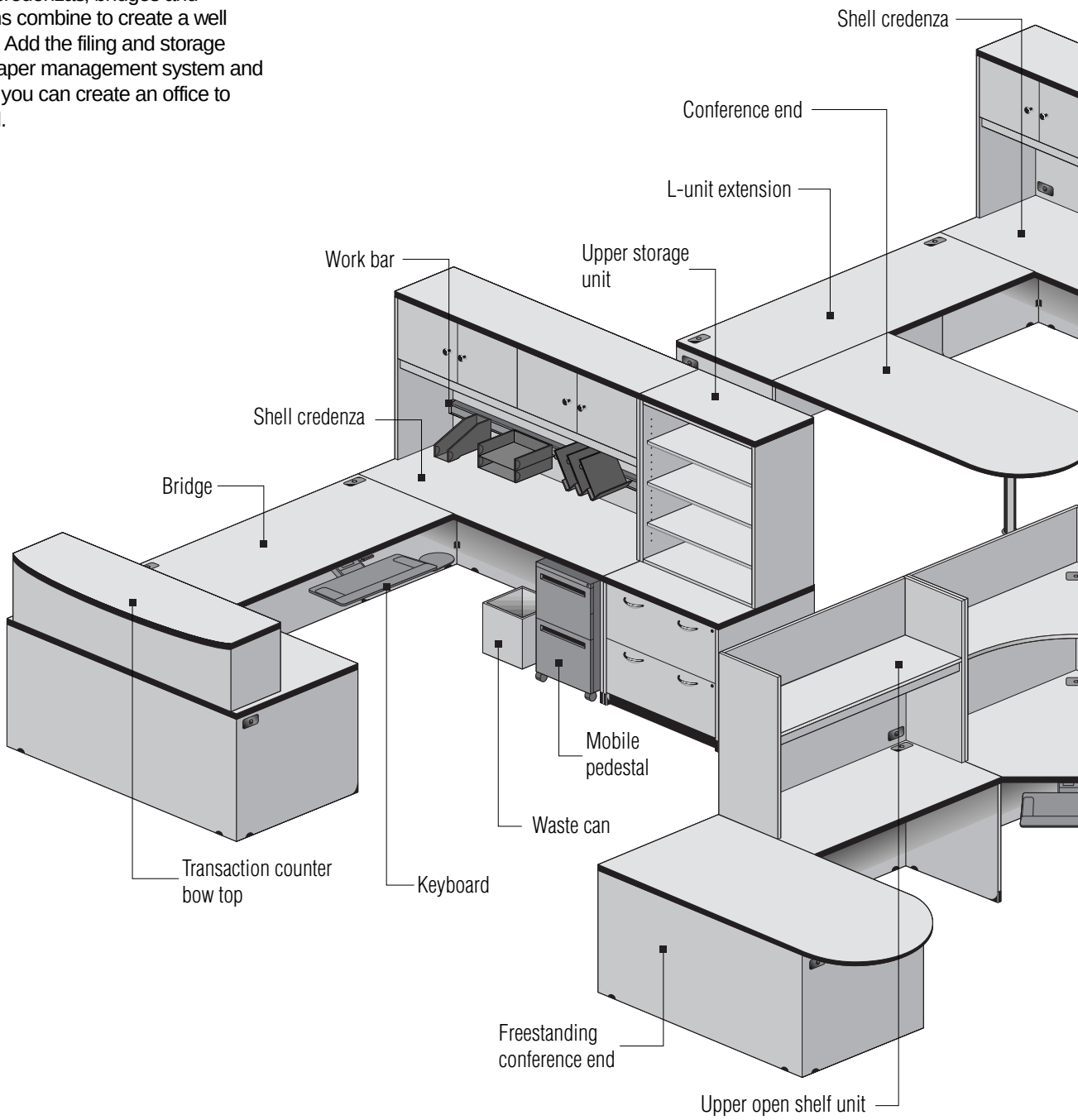

Harmony Overview

HARMONY

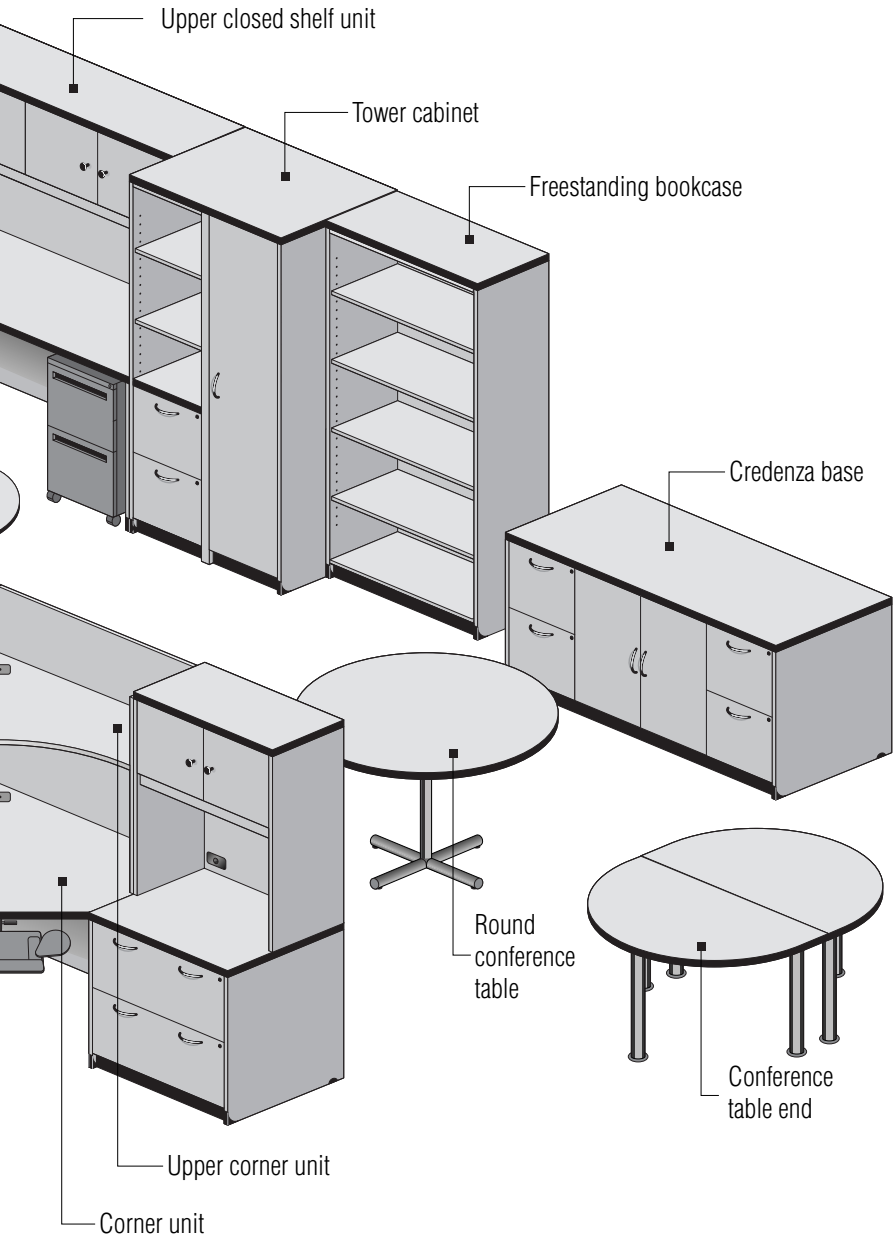

Worksurface Planning 2

CONSTRUCTION FEATURES 2

DESKS 3-4

CREDENZA BASE UNITS 5

Overhead Storage Planning 6

OVERHEAD STORAGE UNITS 6

UPPER SHELF UNITS 7-8

Storage Planning 9

FREESTANDING PEDESTALS 9

FREESTANDING BOOKCASES & FILES 9

TOWER CABINETS 10

TRANSACTION COUNTER 11

Table Planning 12

CONFERENCE TABLES 12

OCCASIONAL TABLES 12

COMPUTER TABLES 13

COMPUTER STANDS 13

Accessories 14

WORKSTATION ACCESSORIES 14

PAPER MANAGEMENT 14

Workstation Configurations .. 15-16

Harmony Planning Review 17

©1999 UNICOR Federal Prison Industries, Inc.

Figure 2

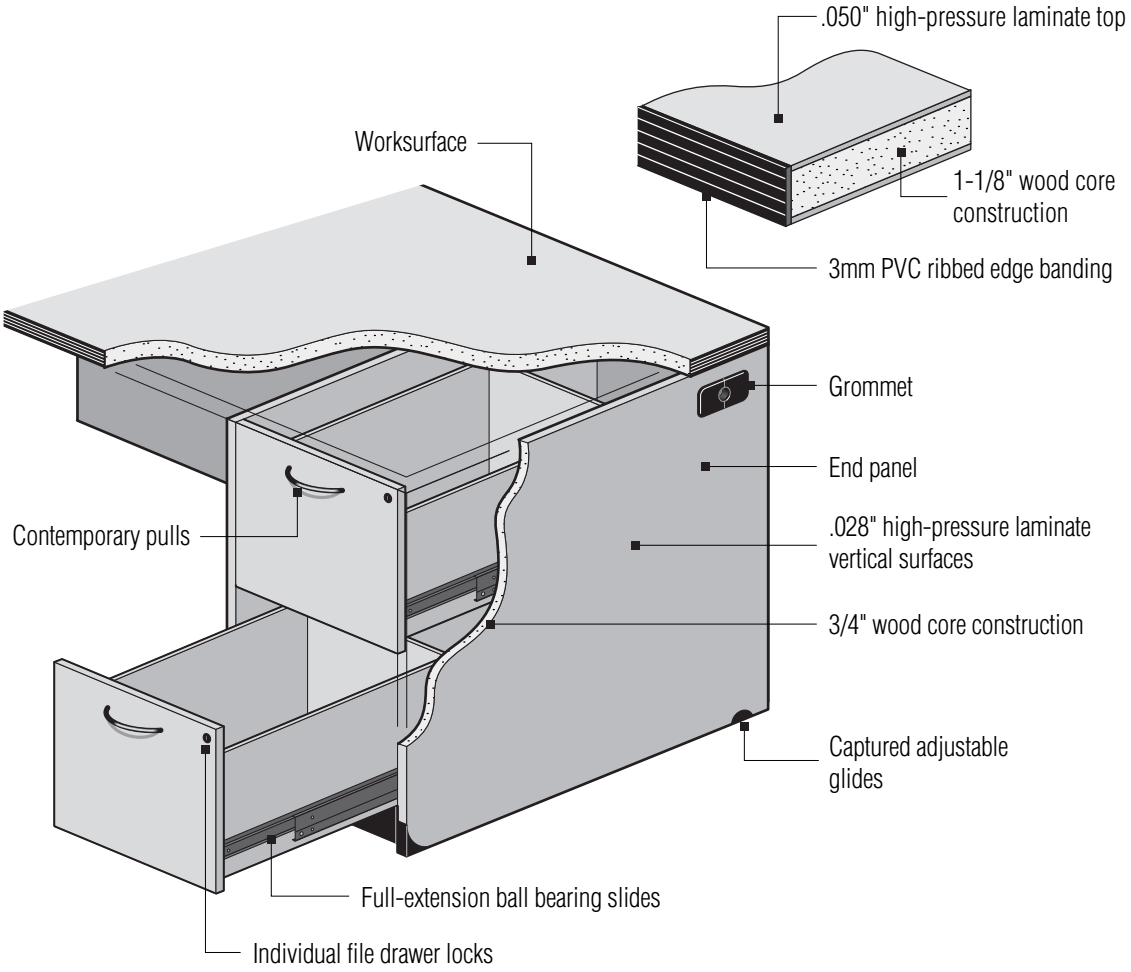

CONSTRUCTION FEATURES

Harmony desks, credenzas, bridges, conference ends and extensions combine to define the shape of the workstation and provide support for overhead storage. Wood core construction with premier quality laminates, ensures a durable, attractive, long lasting, quality product.

Tops feature 1⅛" solid wood core construction with .050" thick high-pressure laminate surfaces. Desk and credenza top edges are finished on all sides with 3mm PVC, ribbed edge banding in a black finish.

Vertical end panels and supports are ¾" wood core construction with .028" thick high-pressure laminate.

Laminates are available with a matte finish in nine colors. End and modesty panels are supported by adjustable glides with captured glide housings for added stability. Wire management grommets are located in the back upper corner of each end panel to route wires neatly off the worksurface. Credenzas, extensions and bridges have grommets also located in the back corner of the worksurface tops.

Pedestal desks and credenzas have drawers with ½" seven-ply birch plywood sides and ¼" birch plywood bottoms, finished with clear satin lacquer. Pedestal file drawers and lateral file drawers travel on full-extension, ball bearing slides.

DESKS

Harmony desks are available in a full range of sizes and shapes. The basic shapes and sizes are as follows:

Shell Desk
60", 66", 72" Wide x 30" Deep

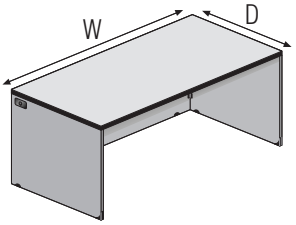

Single Pedestal Desk
— Left or Right
48", 60", 72" Wide x 30" Deep

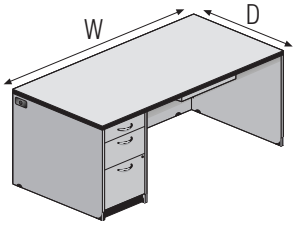

Double Pedestal Desk
60" Wide x 30" Deep

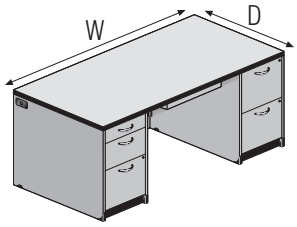

Single Pedestal Bow
Top Desk — Left or Right
60", 72" Wide x 36" Deep

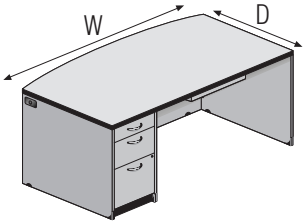

Double Pedestal
Bow Top Desk
60", 72" Wide x 36" Deep

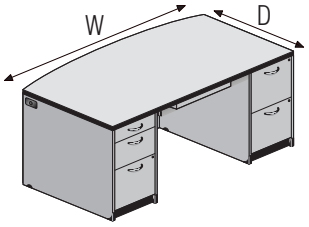

Conference End
Desk — Left or Right
60", 72" Wide x 30" Deep

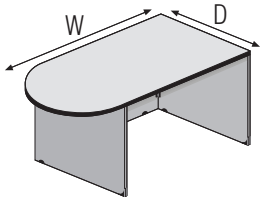

Shell Desk
The shell desk is available with a rectangular top, 30" deep by 29½" high in three widths: 60", 66" and 72" wide. Wire management grommets are located in the back upper corner of each end support panel.

Single Pedestal Desk
The rectangular top single pedestal desk is available with the pedestal located on the left or right of the user. Desks are 30" deep by 29½" high in three widths: 48", 60" and 72" wide. The single pedestal desk includes a pencil/box/file drawer pedestal and a revolving pencil drawer, located in the center of the knee space. The file drawer has an individual lock.

Double Pedestal Desk
The rectangular top double pedestal desk has two pedestals, one with a pencil/box/file combination and the other with two file drawers. The file drawers have individual locks, keyed-alike. A revolving pencil drawer is located in the center of the knee space. The double pedestal desk is available 30" deep by 29½" high by 60" wide.

Bow Top Single Pedestal Desk
The bow top desk has a top surface that curves on the guest side to extend 6" at the center. The bow top single pedestal desk is available with the pedestal located on the left or right of the user. Bow top desks are 36" deep, at the center, by 29½" high in two widths: 60" and 72" wide. The single pedestal desk includes a pencil/box/file drawer pedestal and a revolving pencil drawer located in the center of the knee space. The file drawer has an individual lock.

Bow Top Double Pedestal Desk
The bow top desk has a top surface that curves on the guest side to extend 6" at the center. The bow top double pedestal desk has two pedestals, one with a pencil/box/file combination and the other with two file drawers. The file drawers have individual locks, keyed-alike. A revolving pencil drawer is located in the center of the knee space. The bow top double pedestal desk is available 36" deep, at the center, by 29½" high in two widths: 60" and 72" wide.

Conference End Desk
Conference end desks have one end that is radiused for conferencing. Conference desks are available 30" deep by 29½" high in two widths: 60" and 72" wide. Desks are available with the conference extension at the users left or right.

Desks can be expanded to create a larger work area with the use of conference ends, L-unit extensions and U-unit bridges. Available sizes are as follows:

Conference End
48", 60" Wide x 30" Deep

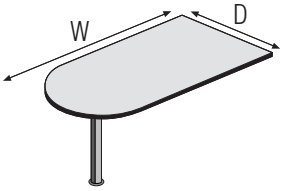

L-Unit Extension — Left or Right End Support
48", 66" Wide x 24" Deep

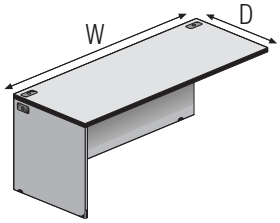

U-Unit Bridge
48" Wide x 24" Deep

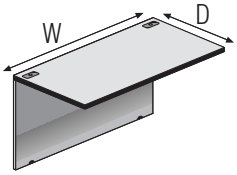

Corner Unit
42" Wide x 24" Deep x 24" Deep
42" Wide x 24" Deep x 30" Deep
42" Wide x 30" Deep x 24" Deep
42" Wide x 30" Deep x 30" Deep

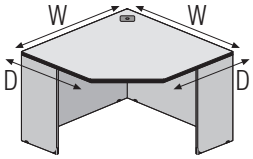

Conference End
The conference ends have one end that is radiused for conferencing and is supported by a column located in the center of the radiused end. The other end has a mounting plate for attaching to the user side of a desk or credenza. The conference ends are available 30" deep by 29½" high in two widths: 48" and 60" wide.

L-Unit Extension
The L-unit extensions have rectangular tops 24" deep by 48" and 66" wide. Extensions are available in two heights: secretarial height of 26½" and desk height of 29½". L-unit extensions provide returns for desks and credenzas. They must be specified for left or right end panel location. The other end has a mounting plate for attaching to the user side of a desk or credenza of the same height, or a Z-bracket for attaching a secretarial height extension to a desk height. Extensions have a grommet located in the end panel and two grommets located in the back corners of the worksurface.

U-Unit Bridge
The U-unit bridge has a rectangular top 24" deep by 48" wide. Bridges are available in two heights: secretarial height of 26½" and desk height of 29½". Bridges have mounting plates for attaching to the user side of desks or credenzas of the same height, or Z-brackets for attaching secretarial height bridges to desk height desks or credenzas. Bridges have two grommets located in the back corners of the worksurface.

Corner Unit
Corner units occupy a 42" by 42" corner and are available with same-depth, 24" or 30" deep worksurface at both ends, or dual-depth with 24" deep at one end and 30" deep at the other end. This provides for a smooth transition from a desk, 30" deep, to a credenza, 24" deep. Corner units must be used with L-unit extensions or desks for support.

CREDENZA BASE UNITS

Credenza base units are available as shell units, kneehole units or complete filing and storage units. Credenza bases share the same quality construction as desks. Shell credenza units have wire management grommets located in the end panels and two grommets located in the back corners of the worksurface. All file and lateral drawers include individual locks. Locks are keyed-alike within each unit. Credenza units are sized as one position (16½" wide), two position (33" wide) or four position (66" wide). Shell credenzas are sized to match the shell desks — 48", 60", 66" and 72" wide. This permits the use of individual upper storage units, of matching size to the base, or combinations of units to equal the width of the base unit. For example: A four position base unit can support two, two position upper units or one four position upper unit.

Figure 3

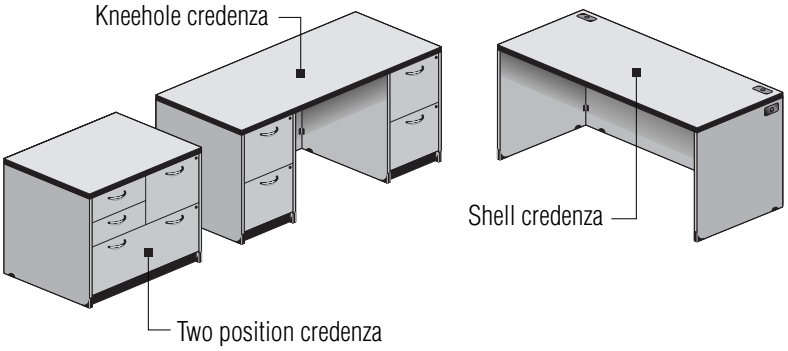

Shell Credenza Unit
Shell credenzas are available with rectangular tops 24" deep by 29½" high in four widths: 48", 60", 66" and 72" wide. Wire management grommets are located in the back upper corner of each end support panel.

Two Position Credenza Unit
The two position credenzas are 33" wide by 24" deep and 29½" high. The two position credenzas are available in two styles: one with a lateral file on bottom and a pencil/box drawer combination next to a file drawer on top, and the other unit has two solid doors with one adjustable shelf. The two drawer lateral file is also the same size and can be used as a two position credenza.

Four Position Credenza Unit
The four position credenzas are 66" wide by 24" deep and 29½" high. The four position credenzas are available in two styles and eight configurations. The kneehole style has either drawer pedestals or single door units located on each end, and the second style has solid single door, solid double door, single pedestal or lateral file combinations to create a full range of storage options. See the Harmony Price List for the option that best meets your needs.

OVERHEAD STORAGE UNITS

Overhead storage units are available in a wide variety of options. There are open shelves, shelves with solid doors, shelves with glass doors and open or closed upper shelves that can be used to meet any storage need. Units are available in a range of sizes that can be used in combination or individually. Storage units are available with rectangular or bow tops to create design accents. Overhead units have the same durable construction as the desks; solid wood cores with high-pressure laminate finishes.

Figure 4

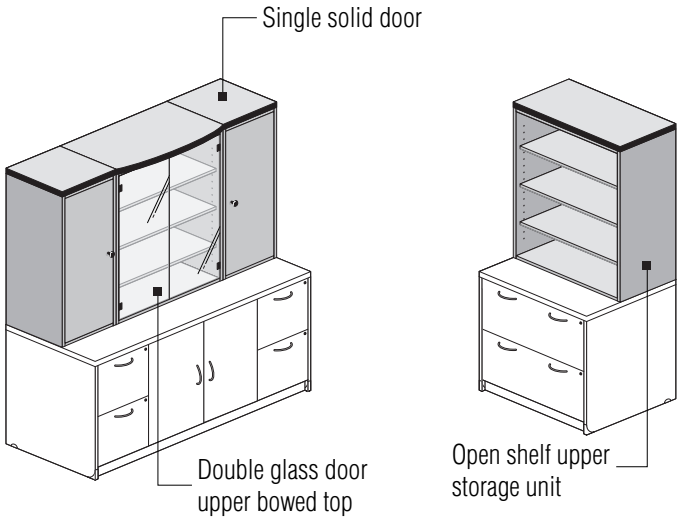

Open Shelf Unit
Open shelf units are available in a one position unit or a two position unit. Single position units have rectangular tops. Two position units are available with rectangular or bow tops. The single unit is 16½" wide by 15" deep by 39" high. The two position unit with rectangular top is 33" wide by 15" deep by 39" high. The bow top two position unit has a bow top that extends 3" at the center to 18" deep. Open shelf units include three adjustable shelves.

Solid Door Unit
Solid door units are available in a single door, one position unit, or a double door two position unit. Single door (single position) units have rectangular tops. Double door (two position) units are available with rectangular or bow tops. The single solid door unit is 16½" wide by 15" deep by 39" high. The double solid door unit with rectangular top is 33" wide by 15" deep by 39" high. The bow top double door unit has a bow top that extends 3" at the center to 18" deep. The single door unit has a reversible door for left- or right-swing. Solid door units include three adjustable shelves.

Glass Door Unit
Glass door units are available in single door, one position units, or double door two position units. Single door (single position) units have rectangular tops only. Double door (two position) units are available with rectangular or bow tops. The single glass door unit is 16½" wide by 15" deep by 39" high. The double glass door unit with rectangular top is 33" wide by 15" deep by 39" high. The bow top double glass door unit has a bow top that extends 3" at the center to 18" deep. The single door unit has a reversible door for left- or right-swing. Glass door units include three adjustable shelves.

UPPER SHELF UNITS

Figure 5

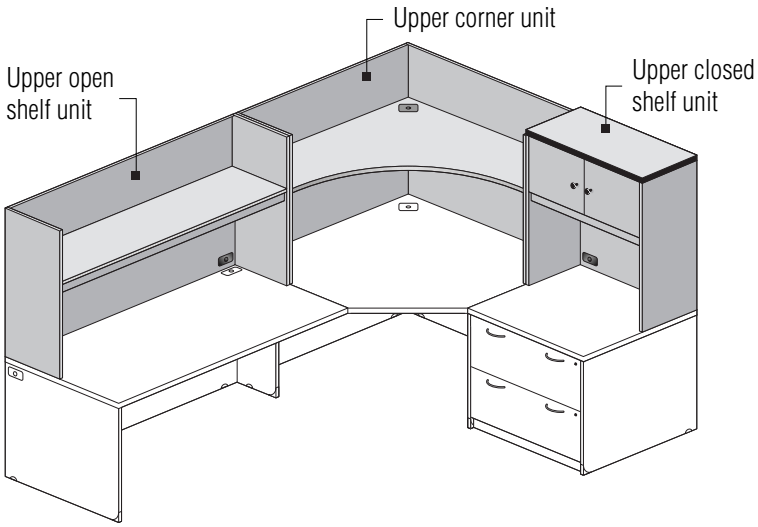

Open and Closed Upper Shelf Units

Upper shelf units are overhead cabinets, designed for placement on the tops of desks and credenzas. Upper shelf units are available with open or closed shelves. Closed shelf units have either two or four hinged doors per unit and include an adjustable shelf. The shelf on all units, except the corner unit, has a valance to help conceal the fluorescent task light. The clearance between the worksurface and the valance is 20". Upper shelf units are 15" deep and available in five widths: 33", 48", 60", 66" and 72" wide. The closed shelf units have tops with black ribbed PVC that matches the edge treatment of the worksurfaces. This makes the total height of the closed shelf units 39" high and the open shelf units, without tops, 37¾" high. Units are finished with high-pressure laminate on all sides. The back panels accommodate the attachment of the optional paper management system and have wire management openings in each bottom corner for convenience. The 66" closed shelf unit is also available with an open back.

Upper shelf units should have their end supports positioned over the end panels of desks and credenzas of the matching width.

- 33" wide units are for use with a 33" wide credenzas.
- 48" wide units are for use with 48" wide desks or 48" wide credenzas.
- 60" wide units are for use with 60" wide desks or 60" wide credenzas.
- 66" wide units are for use with 66" wide shell desks or 66" wide credenzas.
- 72" wide units are for use with 72" wide desks or 72" wide shell credenzas.

Figure 6

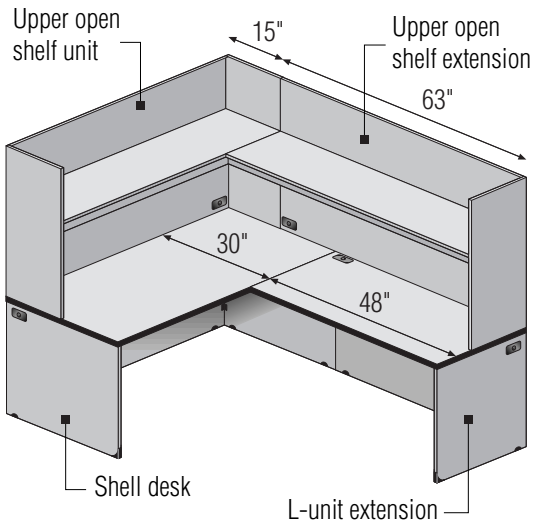

Upper Open Shelf Extension Units

Upper open shelf extension units are the same basic construction as the upper open shelf units, except they have only one end support. The opposite end is attached to an upper open shelf unit for support. Upper extension units are sized for placement on 48" wide, L-unit extension bases attached to desks or credenzas. The proper width unit must be specified for your application. The 57" wide upper shelf extension is used with a 48" wide base attached to a 24" deep credenza with an upper open shelf unit. The 63" wide upper shelf extension is used with a 48" wide base attached to a 30" deep desk with an upper open shelf unit. An easy formula for determining the correct width unit is: Extension width (48") plus desk (30") or credenza (24") depth minus 15" = Upper shelf unit width.

Upper open shelf extensions have full back panels with wire management openings in each bottom corner. Units have a fluorescent task light concealed by an under shelf valance. Upper extension units are available in two widths: 57" and 63" wide and are available with left or right end supports.

Upper Corner Unit

The upper corner unit is for use with corner desks. It is 42" wide by 42" wide and 15" deep on both ends. The upper corner unit has an open shelf without a task light because of the radius of the shelf.

FREESTANDING PEDESTALS

Freestanding pedestals are available as stationary pedestals or mobile pedestals.

Figure 7

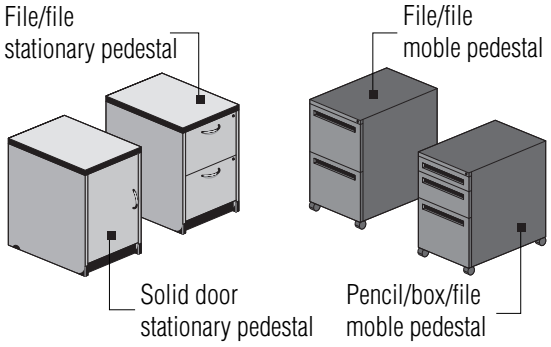

Stationary Pedestals
Stationary pedestals are sized and finished to match the credenzas. There are three styles available: a drawer unit with a pencil/box/file drawer combination, a two file drawer combination and a stationary cabinet with a solid single door. The file drawers have individual locks that are keyed-alike within each unit or specific keying combinations can be specified at no charge, but must be included with the original order. Stationary pedestals are 16½" wide by 24" deep and 29½" high. Being the same height and depth as a credenza, they can be used along side of or independent of a desk or credenza. The solid single door is field reversible for left or right swing.

Mobile Pedestals
Mobile pedestals are available with two drawer combinations: pencil/box/file and two file drawers. Pedestals are 15½" wide by 24" deep with the pencil/box/file unit 24⅜" high and the file/file unit 27⅛" high. The height of both mobile pedestals allows for their use under desks and credenzas. The pencil/box/file unit (24⅜" high) can be used under L-unit extensions or U-unit bridges at secretarial height. Pedestals are steel construction with black finish. Pedestals are equipped with gang locks and four dual-wheel casters.

FREESTANDING BOOKCASES AND FILES

Freestanding bookcases and files are available in several sizes to meet your storage needs.

Figure 8

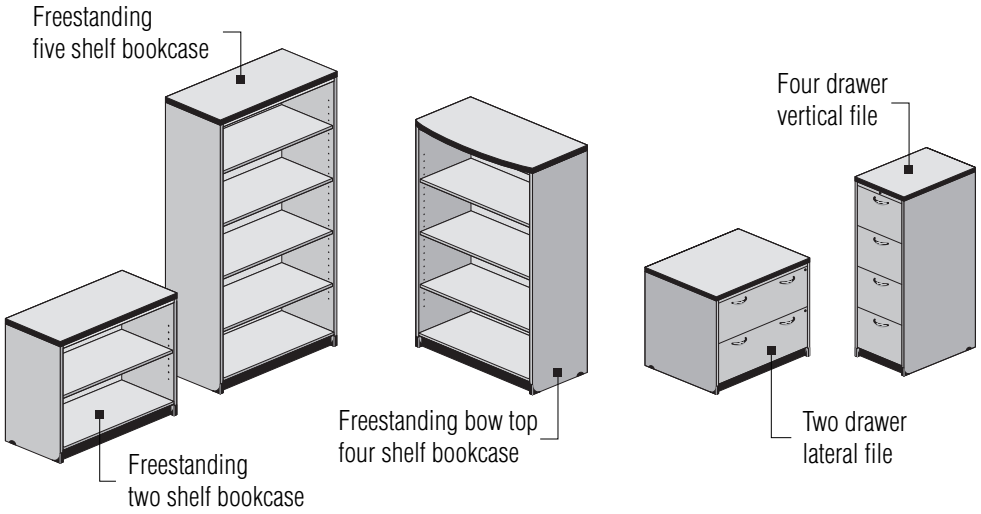

Freestanding Bookcase
Freestanding bookcases are 33" wide by 16" deep and available as two shelf, four shelf or five shelf high units. Bookcases have a fixed bottom shelf, with the rest of the shelves being fully adjustable. All height units are available with straight or bow tops, edged with ribbed black PVC to match the worksurfaces.

Freestanding Files
Freestanding files are available as lateral files, two, three or four drawers high by 33" wide by 24" deep. The two drawer unit can be used as a credenza base. Individual drawer locks are included with the two high lateral file and central gang locks are standard on the three and four high laterals.

A four drawer vertical file is available 17" wide by 24" deep by 53" high. File and lateral file drawers have full-extension ball bearing slides and feature adaptable rails for letter and legal filing. Lateral file drawers allow 16" per row of front-to-back filing and 29" for side-to-side filing.

TOWER CABINETS

Tower cabinets are available in single tower units and double tower units. Tower cabinets match the height of desks or credenzas with upper storage units.

Figure 9

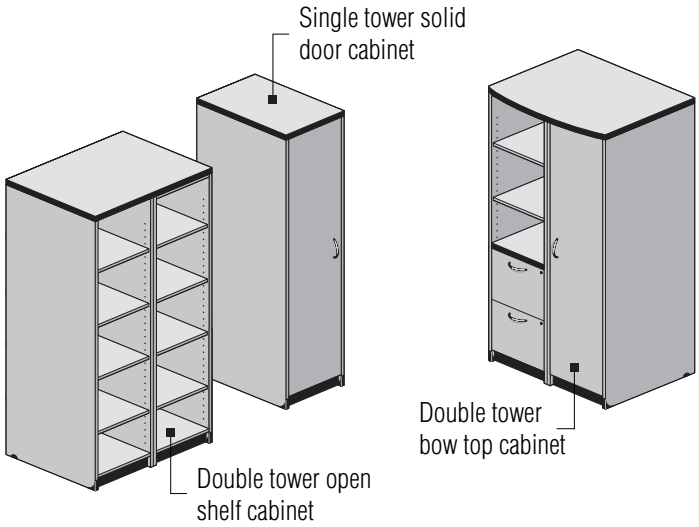

Single Tower Units

Single tower units are 16½" wide by 24" deep by 68½" high with rectangular tops edged with black ribbed PVC. Cabinets and shelves are finished with high-pressure laminate. Single tower units are available in three basic configurations:

- Open shelf cabinets with four adjustable shelves
- Solid door cabinets with four adjustable shelves and a coat rod. This unit can be used as a storage cabinet with the shelves or as a wardrobe with the coat rod.
- Open shelf/file cabinets with two adjustable shelves and two file drawers. This unit has two lockable file drawers mounted below an open shelf unit.

Double Tower Units

Double tower units are available with rectangular or bow tops. Double tower units with rectangular tops are 33" wide by 24" deep by 68½" high. The bow top units have a bow that extends 3" at the center to 27" deep. Double tower units are combinations of the single tower units in the following arrangements:

- Double open shelf cabinet
- Double solid door cabinet
- Solid door left — open shelf right
- Open shelf left — solid door right
- Solid door left — open shelf/file cabinet right
- Open shelf/file cabinet left — solid door right

TRANSACTION COUNTER

Transaction counters, when placed on a desk or credenza create a reception area. Transaction counters have convenient sized vertical and horizontal storage spaces for holding frequently used forms or hand-outs.

Figure 10

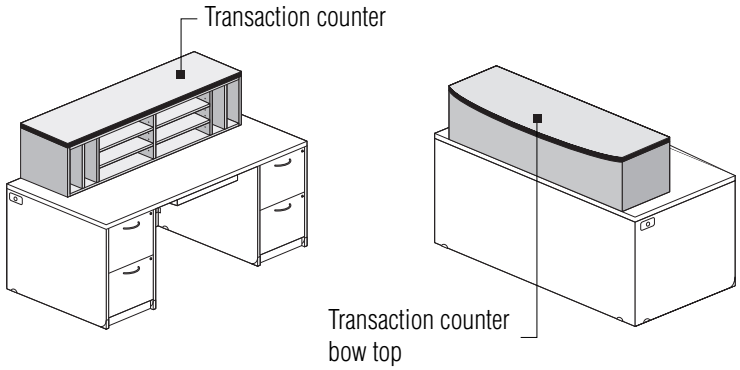

Transaction Counter
Transaction counters are available with rectangular or bow tops. The rectangular top is 15" deep by 60" wide and the bow top is 18" deep, at the center, and 60" wide. Both counters are 15" high. Tops have the same construction as worksurfaces, solid wood cores and high-pressure laminate surfaces with black ribbed PVC edge detail.

TABLES

Harmony offers a full range of conference and occasional tables. Tables have the same basic construction as the desks with solid wood core tops and high-pressure laminate finishes with black ribbed PVC edge detail.

Figure 11

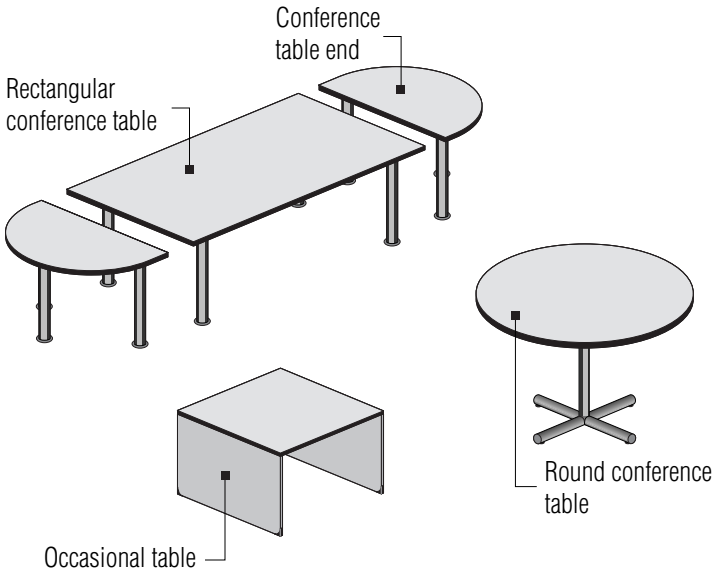

Rectangular Conference Table
Rectangular conference tables are available in two sizes: 36" deep by 72" wide and 42" deep by 96" wide with both 29½" high. Tables are supported by four tubular legs, finished in black.

Half Round Conference Table End
Conference table ends are available to match the depth of the rectangular conference tables at 36" and 42" deep. Half round conference table ends can be used with rectangular conference tables or put together to create an oval table. Tables are supported by three tubular legs, finished in black.

Round Conference Table
Round conference tables are 42" diameter by 29½" high. Round tables are supported by four tubular legs, finished in black.

Occasional Table
Occasional tables are available in two sizes: 28" square by 22⅝" high for use as end tables and 34" square by 20" high for use as a coffee table. Occasional tables have the same basic construction as desks and are available in the same high-pressure laminate finishes.

COMPUTER STANDS

Computer stands come in three varieties: Mobile printer stand, mobile workstation and mobile computer terminal stand.

Figure 12

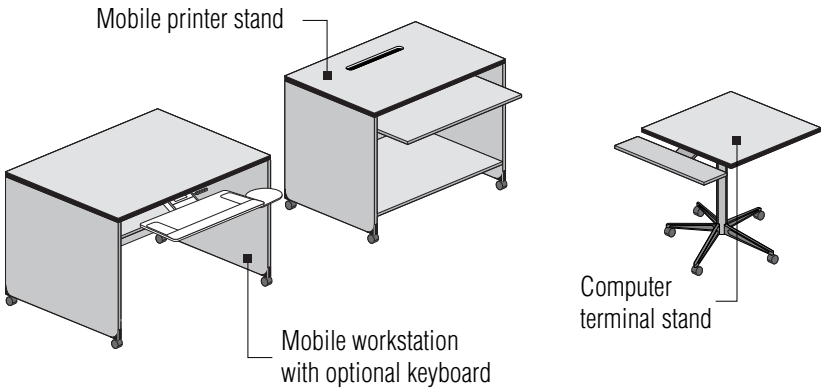

Mobile Printer Stand
The mobile printer stand is 33" wide by 24" deep by 29½" high. The stand comes complete with a paper slot in the top surface, a paper shelf and a pull-out keyboard tray.

Mobile Workstation
The mobile workstation is 42" wide by 30" deep by 29½" high. The size, mobility and under worksurface storage shelf make this mobile workstation fit into many office or library situations.

Mobile Computer Terminal Stand
The mobile computer terminal stand has a 24" square top with a fixed keyboard tray that extends 6" at the front. The stand is supported by a single support column and a five-star base, finished in black.

WORKSTATION ACCESSORIES

Harmony accessories add convenience and order to the workstation.

Figure 12

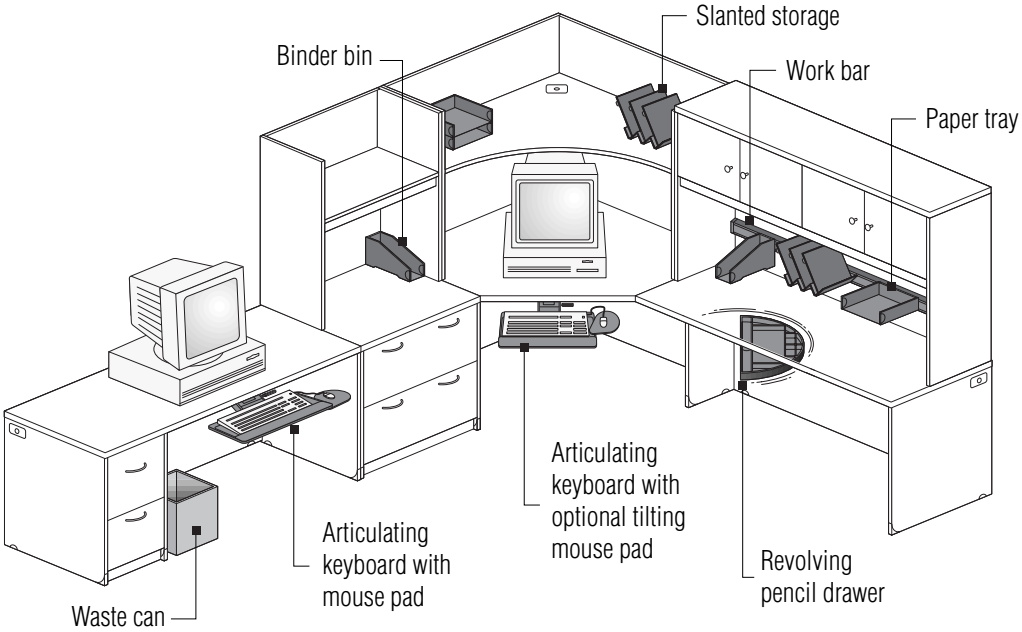

Articulating Keyboard
The articulating keyboard with mouse pad and wrist rest attaches to the underside of desks and credenzas. The keyboard has 5" of vertical adjustment, 359° swivel and tilts up and down for user comfort. The mouse pad swivels out from under the keyboard when in use. The keyboard slides back to store below the worksurface. They are available in black.

Tilting Mouse Pad
The tilting mouse pad is a bracket that is used with the articulating keyboard with mouse pad. The bracket attaches to the keyboard to permit the mouse pad to tilt and to fold back for storage without having to remove the mouse.

Waste Can
The waste can is 12" square by 18" high, available in the high-pressure laminates to match the Harmony furniture.

Clock
A custom clock to accent the office, designed to fit in every workstation at 9½" wide by 15" high and only 1" thick.

Revolving Pencil Drawer
Revolving drawers can be installed under any desk or credenza that does not include one as standard. Drawers are 23½" wide by 13" deep and 1½" high, molded in black.

PAPER MANAGEMENT

Paper management is provided by a system of work bars and components that can be suspended form the work bar or used freestanding on shelves and worksurfaces. The work bar and components are finished in black.

Work Bar
Work bars attach between the end panels of open or closed upper shelf units. Specify the work bar to match the width of the supporting upper shelf unit. Work bars are available 33", 48", 60", 66" and 72" wide. Multiple combinations of paper management units may hang on the bar if their combined width is 8" less than the overall width of the bar specified. For example, a 48" wide work bar has 40" of mounting space.

Paper Tray
The paper tray is available in two sizes to accommodate letter or legal size paper. The trays are 3" high by 9" deep with the letter tray 13" wide and the legal tray 15½" wide. Individual trays can be stacked.

Binder Bin
Binder bins are used for vertical storage of binders. Units are 9" high by 5" wide and 12" deep.

Slanted Storage
Slanted storage may be used for departmental mail sorting or individual workstation organization. The three steel dividers can be positioned to the left or right. Units are 7¾" high by 10" wide and 12" deep.

HARMONY WORKSTATION CONFIGURATIONS

Harmony workstation configurations are offered in six series and over 50 configurations. Each series is a separate layout with varying levels of products. You can order a basic workstation with the use of just one number and add individual components to meet your needs, or you can order a complete workstation with all the accessories by using just one number. See the Harmony Price List for all layout options. Shown is one workstation from each series:

1000 Series

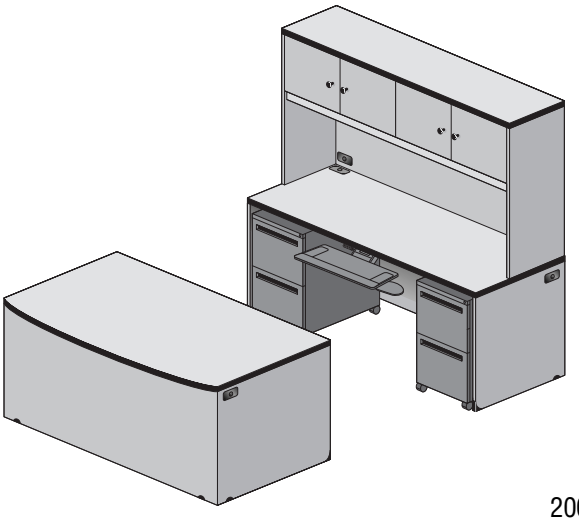

2000 Series

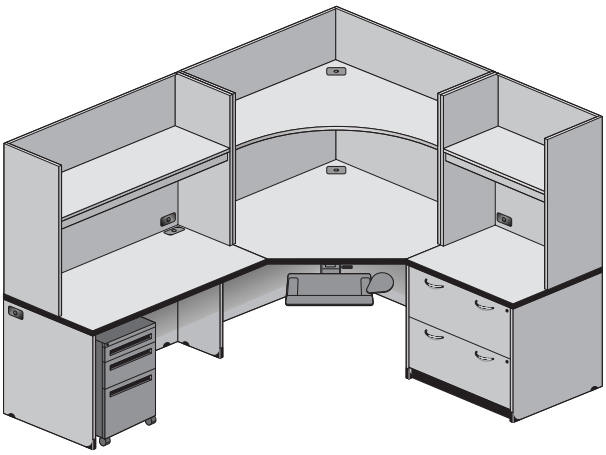

3000 Series

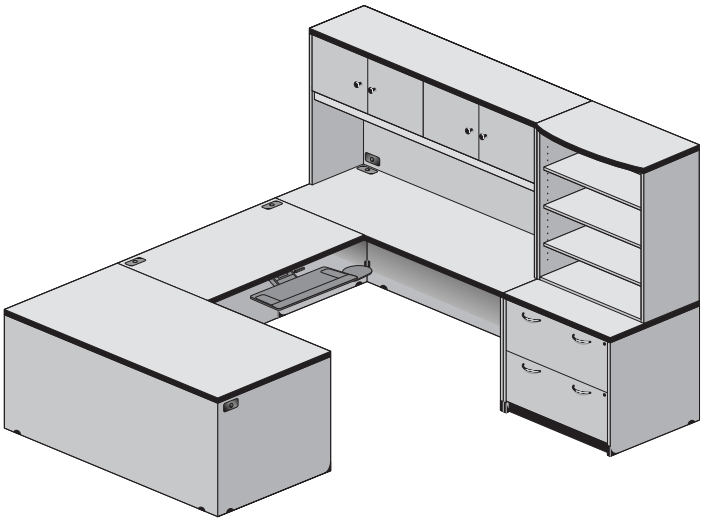

4000 Series

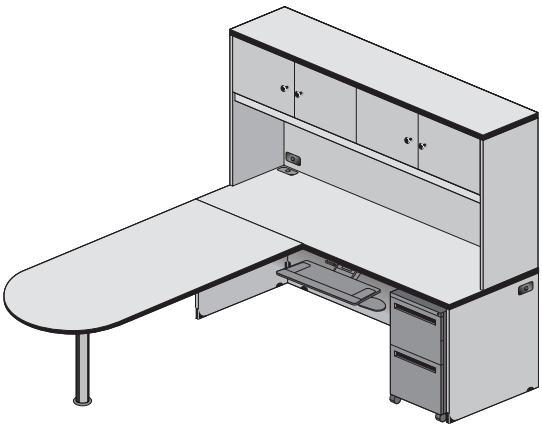

5000 Series

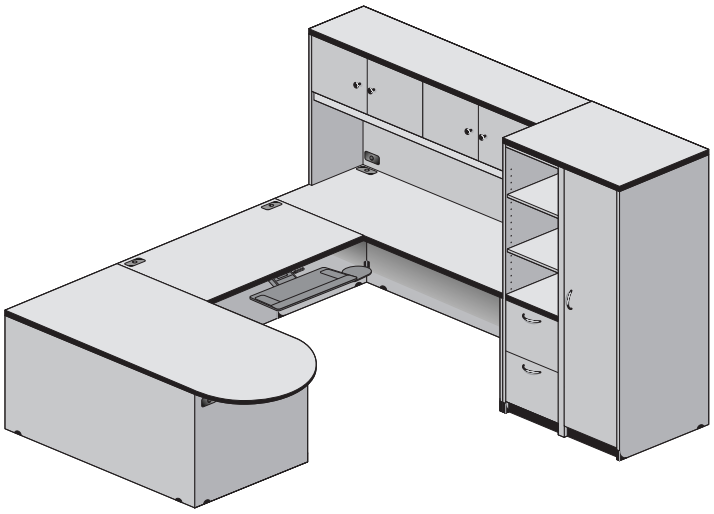

6000 Series

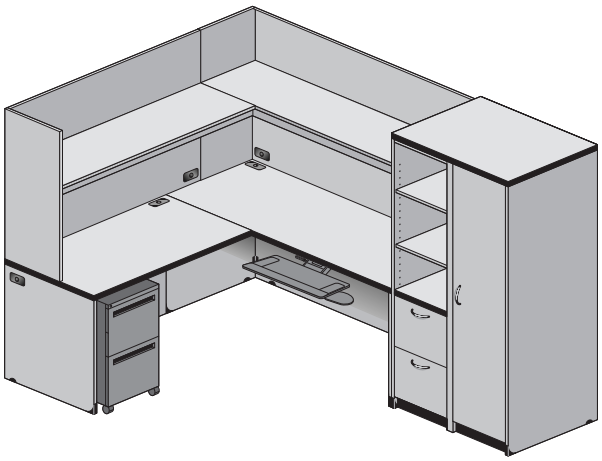

PLANNING REVIEW

Harmony is a modular system of freestanding furniture that is easy to specify. However, there are some products that require special consideration when planning for their use. The following list includes specifying requirements and special design considerations:

To order Harmony products you need to specify these items:

1. Product number
2. Description
3. Color/Finish number
4. Keying option — optional

In planning your layout, special consideration should be given to the following product applications:

1. Corner units
   - Corner units need the support of an attached desk or return. The other feature of the corner unit is that the ends are available in 24" and 30" depths so they can match a desk or credenza when used in conjunction with one or the other.
2. Conference end desk verses conference end
   - The conference end desk is a freestanding desk. It can be used independently or with a bridge or L-unit extension.
   - When using the conference desk with a bridge or L-unit extension the wider, 72" wide, desk provides more leg room than the narrower 60" wide desk.
   - Bridges and L-unit extensions attach to the user side of a desk. This limits the workspace available. The conference end attaches to the user side of a desk or credenza, leaving the full width of the conference end available for worksurface.
3. Freestanding pedestals
   - Freestanding stationary pedestals are the same height as desks and credenzas and will not fit under them. Mobile pedestals are available in two heights: 24¾" and 27⅛" high. The 24¾" high pedestal will fit under regular desk height or secretarial height desks or extensions. The 27⅛" high pedestal will fit under a standard height desk or credenza.

Figure 13

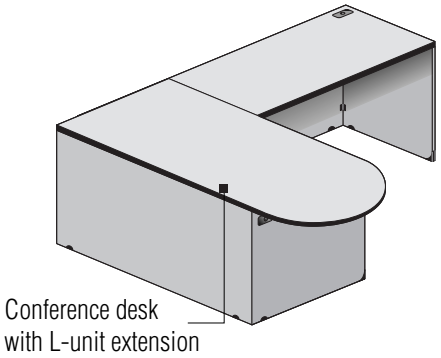

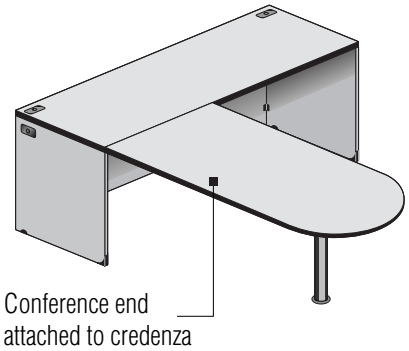

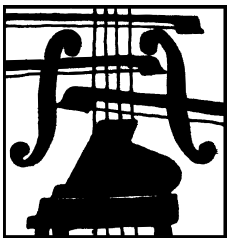

U.S. Department of Justice
UNICOR
Federal Prison Industries, Inc.

PIEA300/OEI/1099

www.unicor.gov